Kaleid workstation assembly

Table of contents

Structural components

Support legs	3-4
Power raceway	5
Structure assembly	6-7

Data/wire management

Data kit	8
Leg wire manager	9

Accessories

Modesty panel	10
Leg privacy screen	11

Infill kits

Transaction shelf	12
Full wall/privacy panel power	13
Full wall panel	14-15
Privacy panel	16
Open shelving	17
Organizer/planter box	18

Worksurfaces

Parallel runoff	19-24
Single runoff	25
Double runoff	26-30
Media runoff	31

Miscellanous

Gallery panel	32

Structural components - support legs

Identify all applicable leg types

- **End Leg**: This leg features a cutout on the face side only on the lower support rail. The upper support rail will contain one upper beam bracket only.
- **Center Leg**: This leg features a cutout on both the face and back sides of the lower support rail. The upper support rail will contain two upper beam brackets.
- **Alternating Leg**: This leg features a cutout on both the face and back sides of the lower support rail, but in opposing locations. The upper support rail will contain two upper beam brackets, but once again in opposing directions.

Continue to step 1.

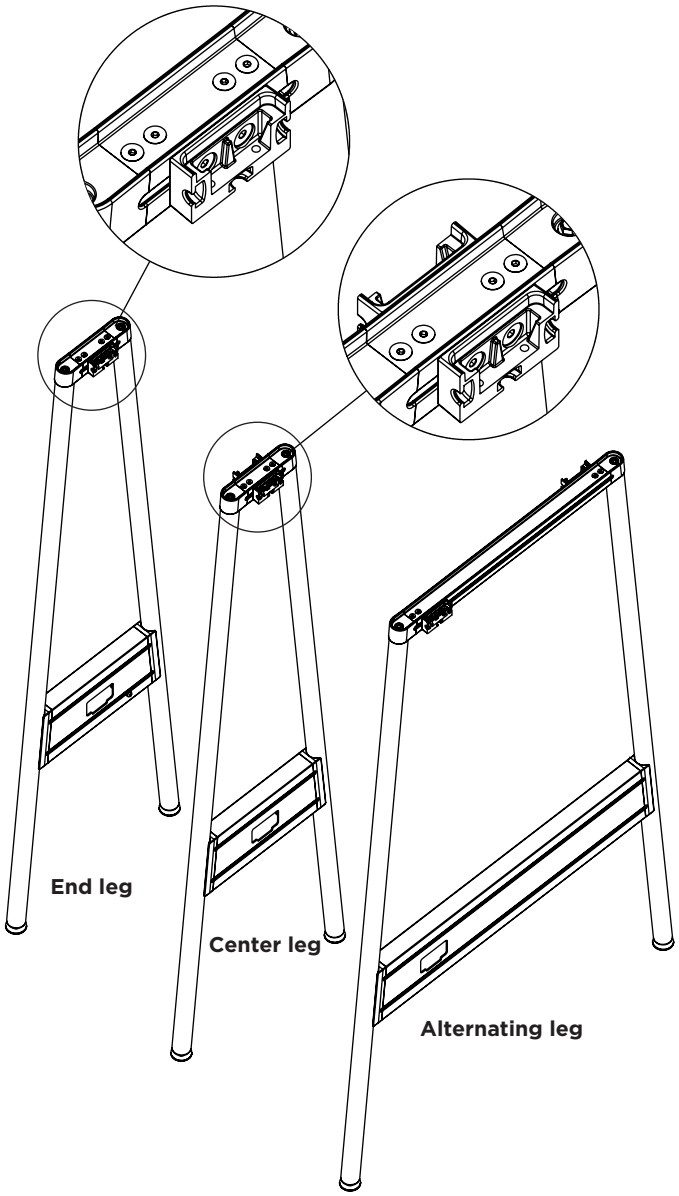

Structural components - support legs, continued

Prepare the legs for the power raceway attachment

1. Insert a T-nut into either the upper or lower slot on the lower support rail of the leg. The T-nut can be inserted by angling and sliding upwards into the channel and then letting it drop into place. The side with the protrusion should face outward. (**Figure A**)
2. Next, partially thread the M8x14mm screw into the T-nut. Repeat this step for the remaining three T-nuts so that two are on the lower channel, and two are on the upper channel. (**Figure B**)
3. **Note:** For alternating Legs only, it is suggested that the power jumper be routed through the lower support rail at this time, as access will be limited after assembly has begun. Insert the jumper though the power cutout and route it through the inner channel until the opposing end can be pulled through the other cutout. (**Figure C**)

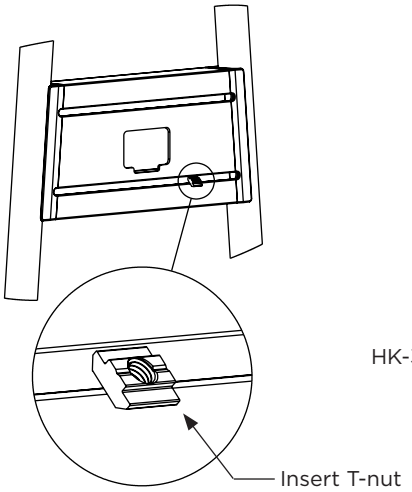

Figure A

HK-304

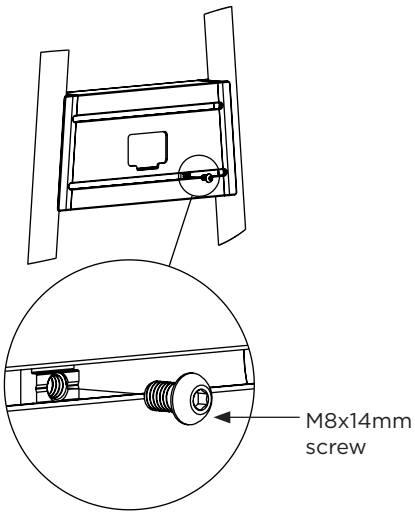

Figure B

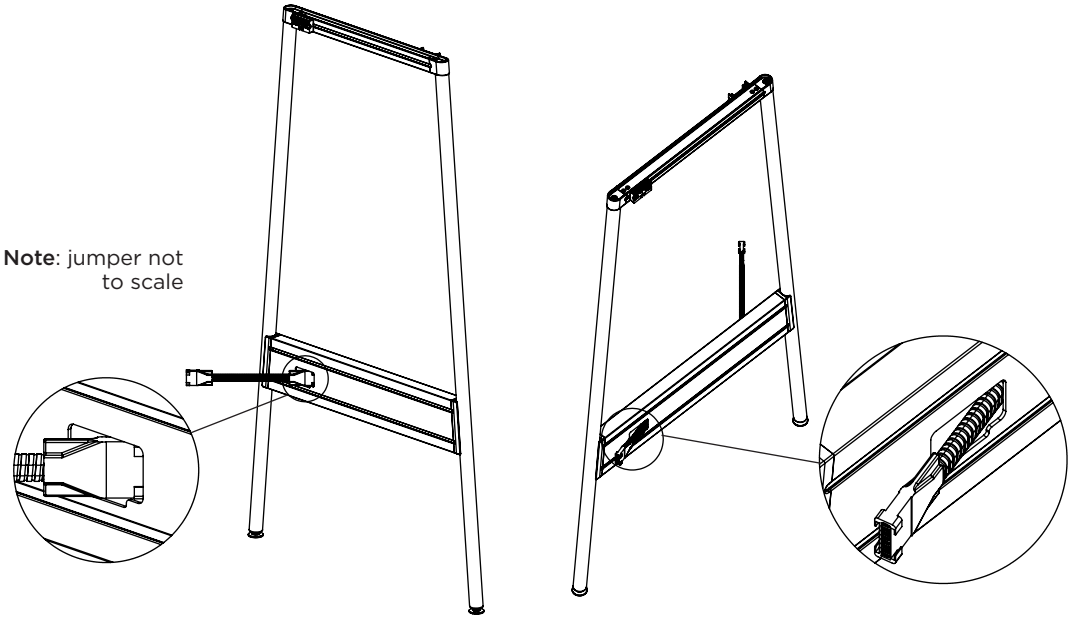

Figure C

Structural components - power raceway

Prepare the raceway for assembly

1. Begin by removing the thumb wheel nuts so that the PET shroud can be removed. (**Figure A**)
2. Once all the nuts have been removed, pull the PET shroud off of the raceway and set aside until later. (**Figure B**)

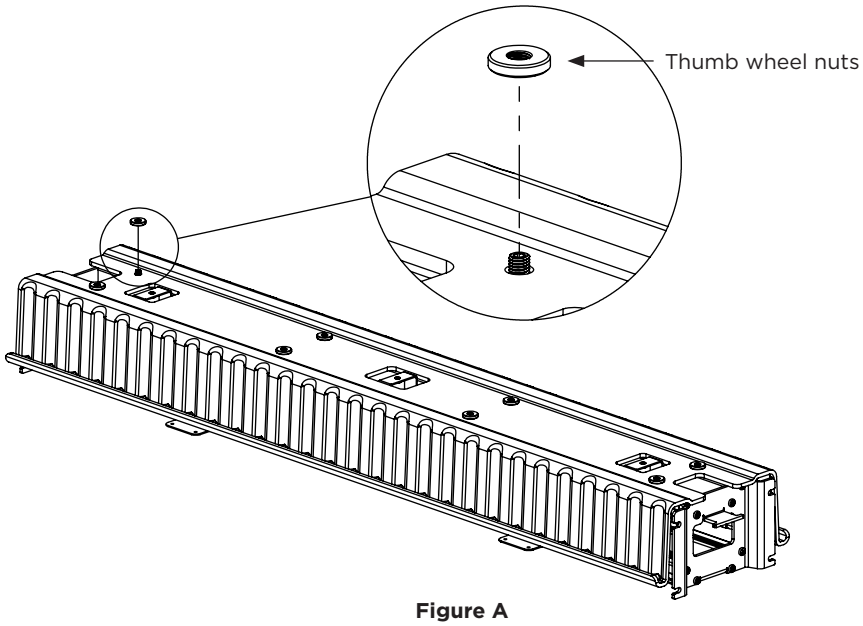

Figure A

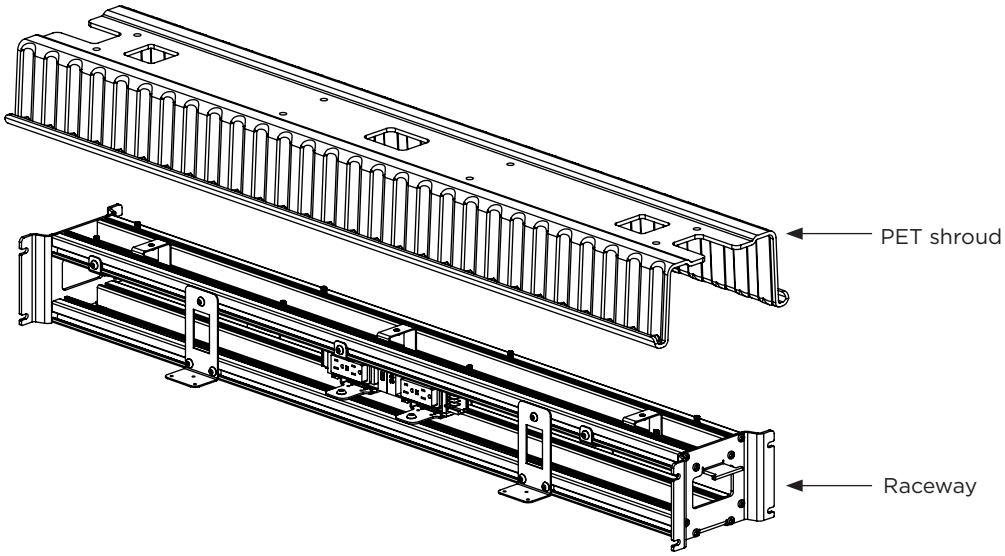

Figure B

Structural components - structure assembly

Note: To begin erecting the primary structure, first assemble the power raceway to the end leg.

1. Locate the “lock tab” on the end of the power raceway.
2. Next, insert the lock tab into the cutout on the end leg and drop the tab into the lock tab groove of the cutout as shown in the illustrations below. Slide one of the screws over into the mount slot and partially fasten. (**Figure A**)
3. Repeat for the remaining three screws and then fully tighten using a 5mm allen wrench. **Note**: This initial step can be more easily maneuvered by placing the leg horizontally on the floor or non-marring surface and then attaching the raceway vertically.
4. Repeat the process of inserting the raceway into the next planned leg on the run and securing it with the screw and T-nut. Continue the remainder of the run until all raceways and legs have been installed.

Continue to upper lateral beam assembly instructions.

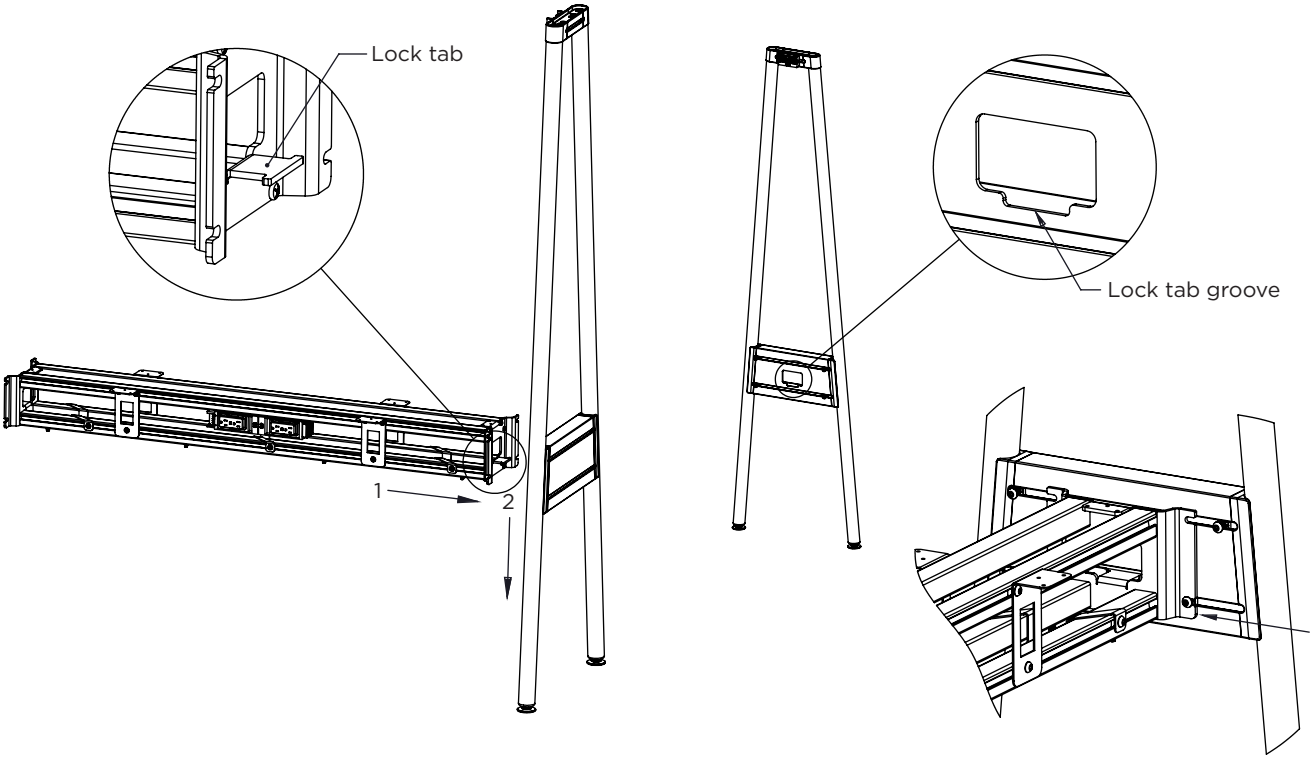

Figure A

Structural components - structure assembly, continued

Upper lateral beam

1. To install the upper lateral beam, raise it above the legs and drop it onto beam connectors that are fastened to the legs.
2. Next, insert all 4 mounting screws and partially thread them in place.
3. Lastly, fully tighten all screws using a 5⁄32” allen wrench. The beam connectors are designed such that the beam will self center and align into place. **Note**: Omit this step if an “open storage shelf-SSK” infill kit is to be installed. Additional hardware and installation is required with this kit before the lateral beam can be set in place.

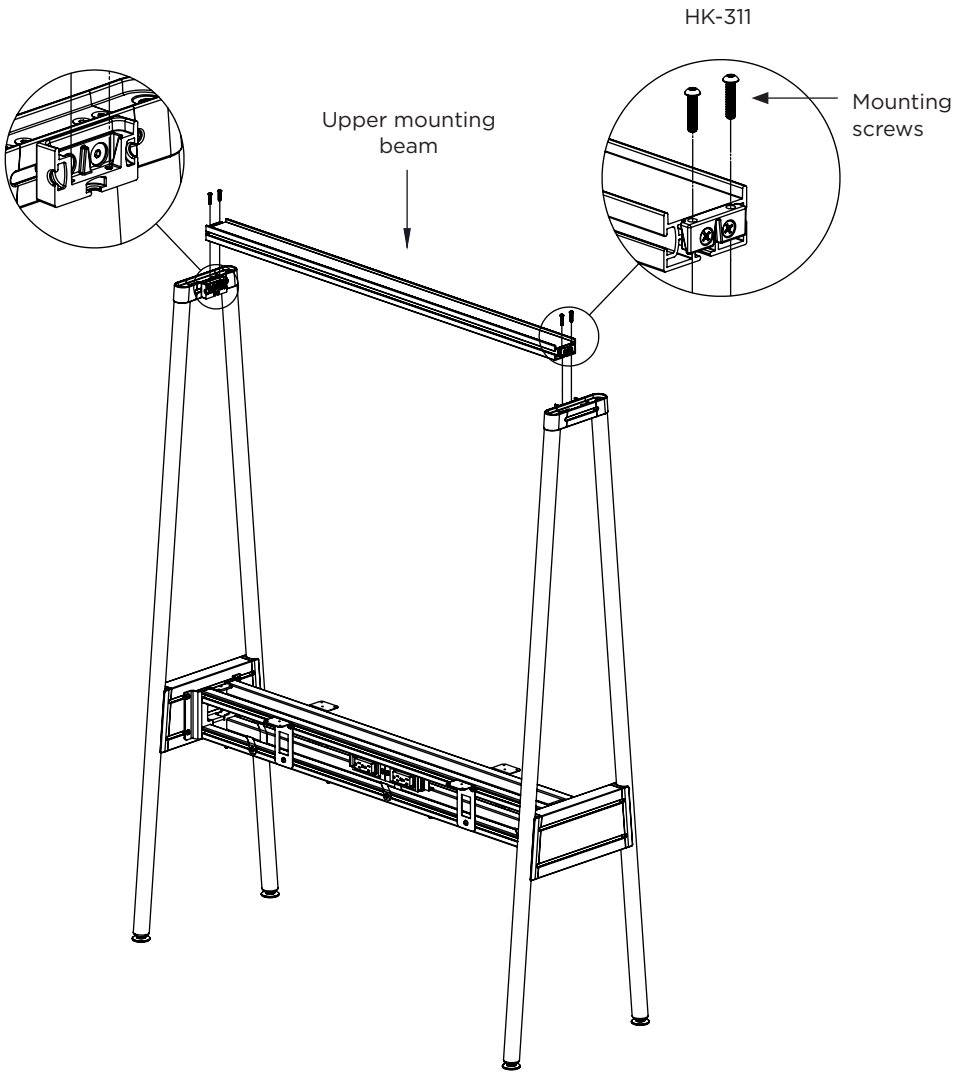

Data/wire management - data kit

The data window accessory is designed to install onto the transaction shelf L-bracket.

1. Snap the data window into the cutout on the bracket making sure the retaining tabs have fully seated.
2. Use the provided data adapter kit to install your desired data cable connector.

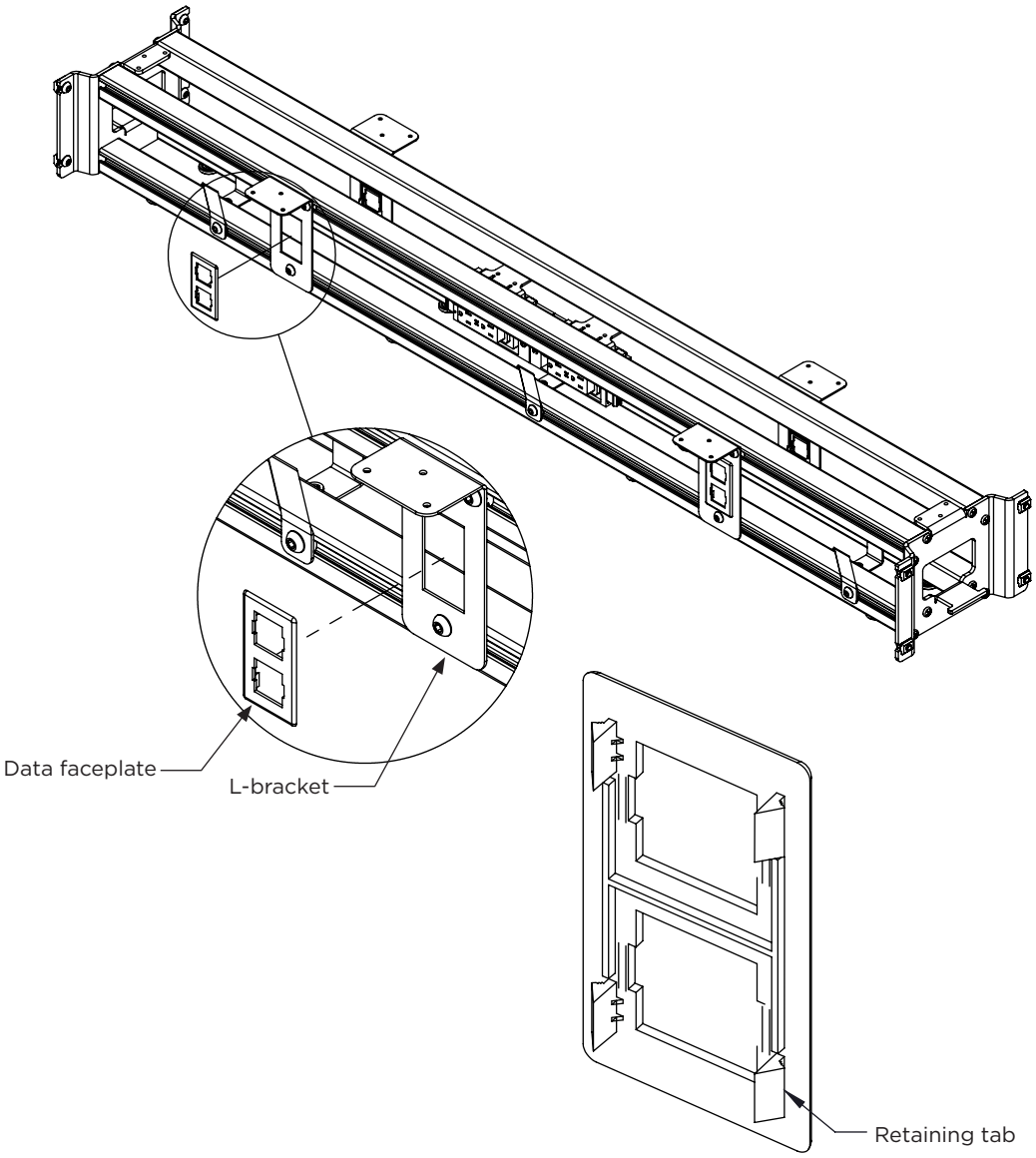

Data/wire management - leg wire manager

1. Place the power infeed inside the channel of the PET wire manager. Once in place, insert the leather mounting straps into the slots on the wire manager. The metal studs on the leather strap should be facing away from the open channel. Next, position the wire manager up against the wood leg and slide upwards until the alignment tabs are inserted into the cutout on the support rail. (**Figure A**)
2. Wrap the leather straps around the leg and pull on each end until the strap is tight and the stud has reached the furthest hole available. Insert the stud into the hole and then close the end off by placing the slack end onto the remaining stud. (**Figure B**)

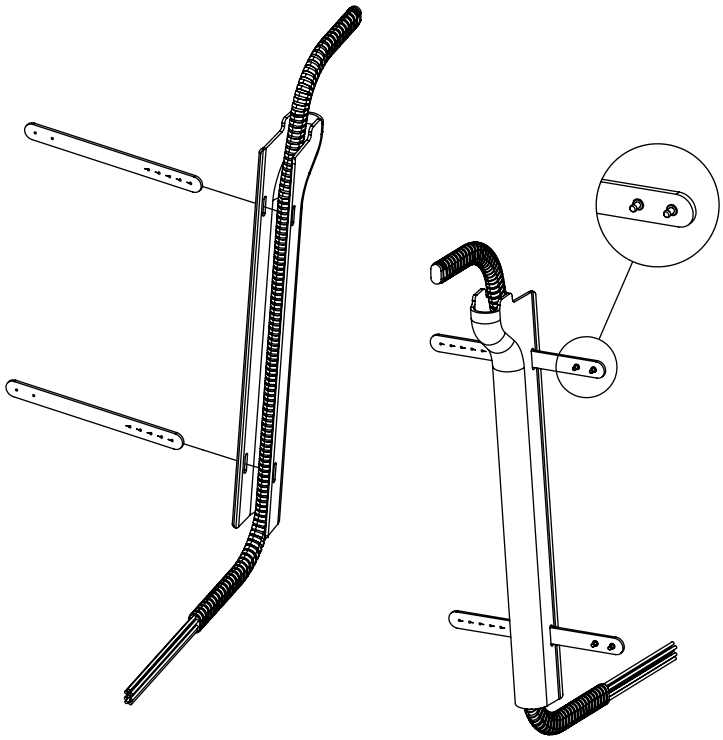

Figure A

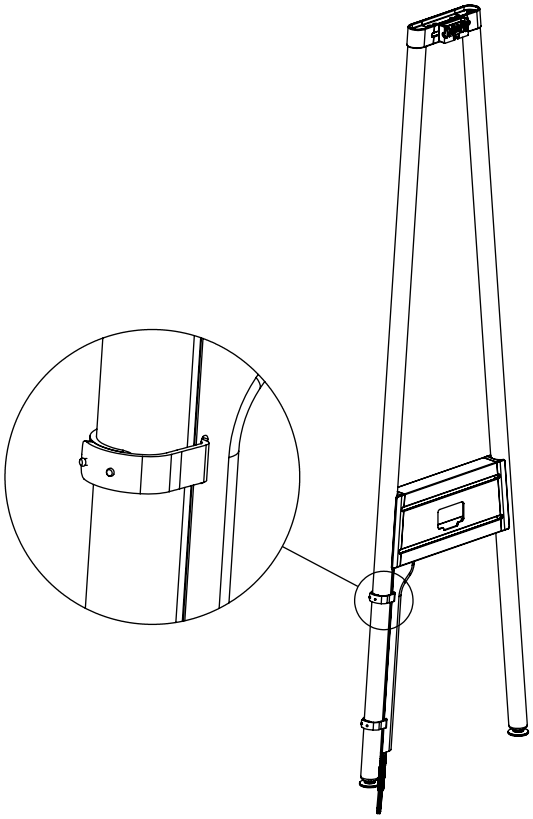

Figure B

Accessories - modesty panel

Note: The modesty panel should only be the installed after all other steps have been completed.

1. Begin installation by attaching the modesty brackets to the cable carrier brackets that are mounted on the power raceway. The modesty brackets can be secured by fastening the ¼-20 UNC screws through the mounting hole and into the threaded hole on the cable carrier bracket. (**Figure A**)
2. Raise the modesty panel up and into the openings of the modesty bracket. Once the clearance holes are aligned between the brackets and the modesty, insert a threaded barrel bolt into the mount holes. This will allow the modesty panel to hang into position until it can be fully secured. Thread a screw into each threaded barrel bolt and fully tighten. (**Figure B**)

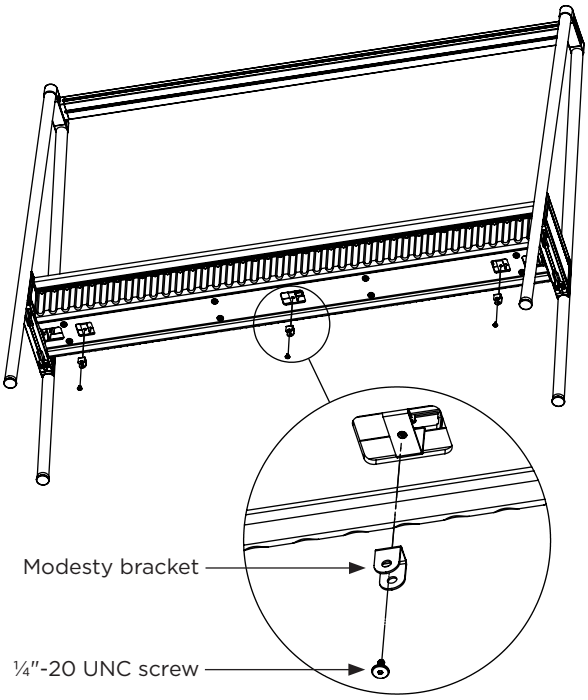

Figure A

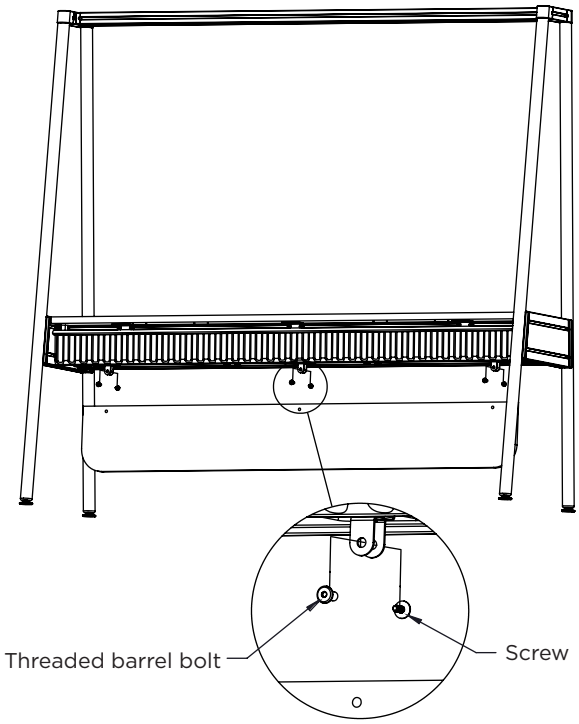

Figure B

Accessories - leg privacy screen

Note: The privacy screen is shown being installed onto a bare support leg for visual purposes, however, it is suggested to install after the primary structure has been built.

1. Place the privacy screen inside the leg opening, letting it rest on top of the support rail.
2. Locate the (4) left hand and (4) right hand clamps along with the screws and threaded barrel bolts. The left hand clamp will have a “L” stamped on the back side and will be sized for the threaded barrel bolt, while the right hand will have “R” stamped and be sized for the screw.
3. Position a left hand clamp on one side of the screen and then a right hand on the opposing side, ensuring that the “UP” stamp is facing upward as shown in the illustration. Insert a bolt and screw through the clamps and partially thread the two together. Repeat this step for the remaining three positions.
4. Visually check to make sure the screen is centered inside the leg and then fully tighten all the screws.

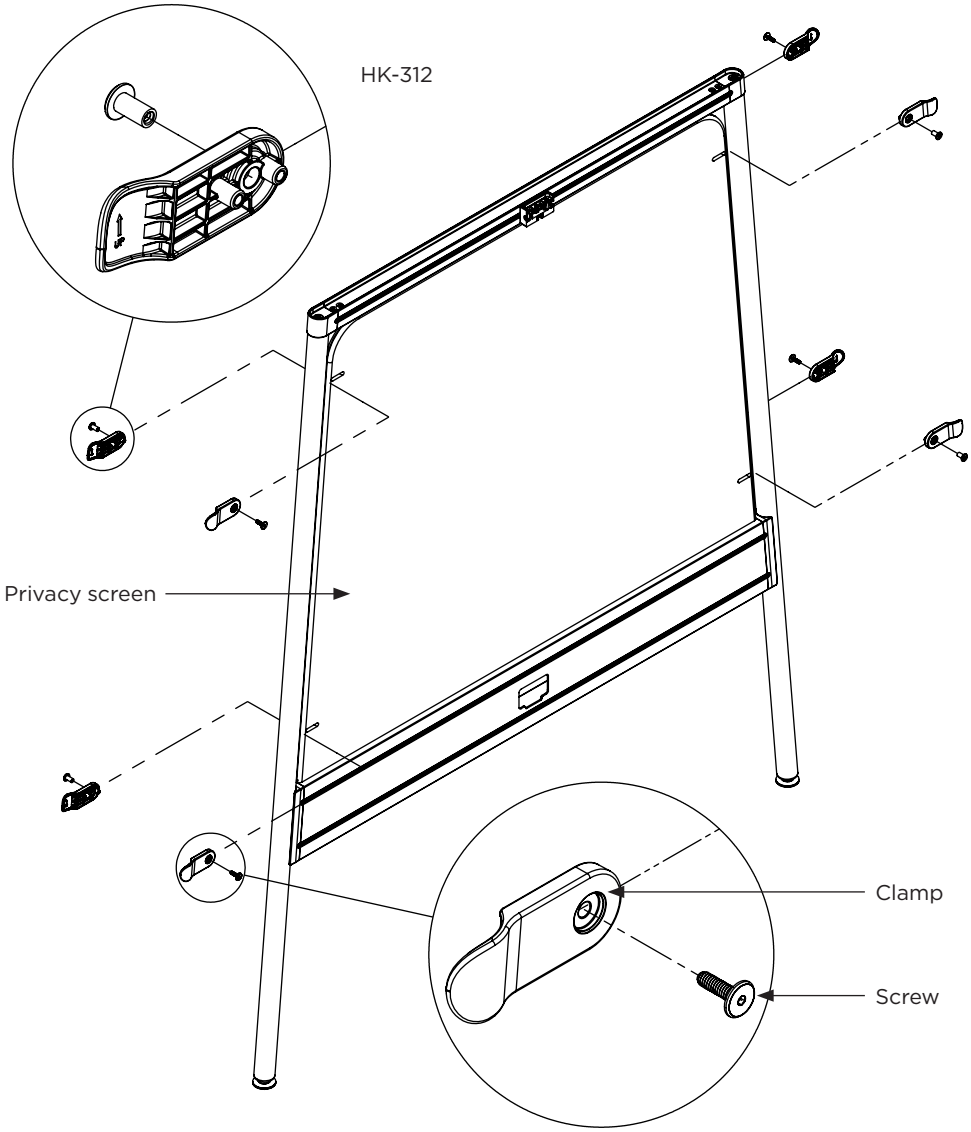

Infill kits - transaction shelf

1. Locate the (2) pre-drilled holes on each end of the transaction shelf.
2. Place the shelf on top of the power raceway and align the pre-drilled holes with the mount holes on the power raceway as shown in the illustration.
3. Secure the shelf by screwing all the supplied #8 screws through the end mounting plates as well as the L-brackets.

Note: If applicable, it is acceptable to install any power supplies onto the transaction shelf before fastening it to the power raceway.

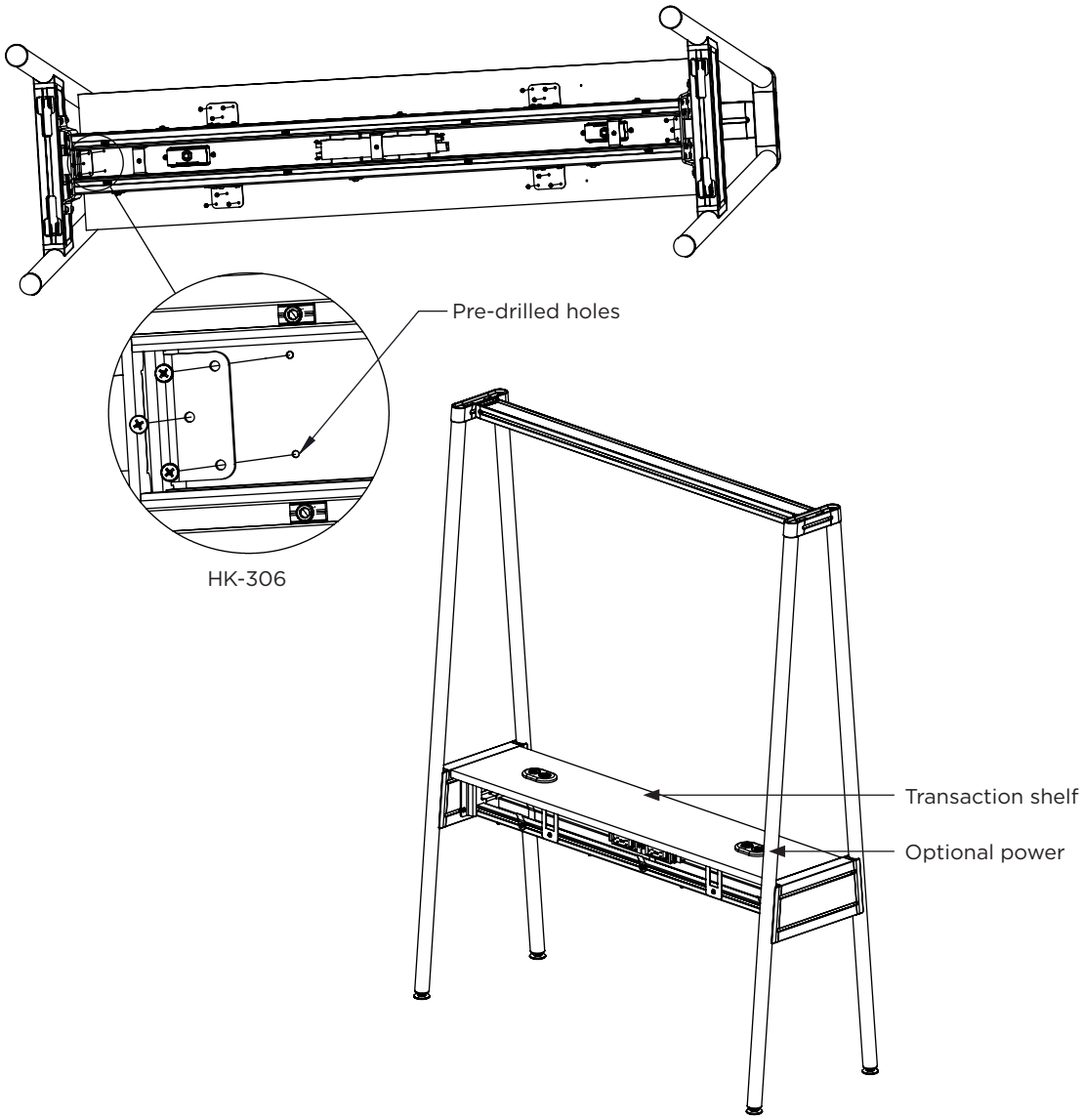

Infill kits - accessory power for full wall and privacy panel

Note: Accessory power for full wall and privacy panel should be installed prior to installing the panels.

1. Drop the plug end of the power cord through the open cutout in the transaction shelf and route it out of the way until the power supply has been mounted. (**Figure A**)
2. Place the power supply onto the face of the transaction shelf. The exposed portion of the mount bracket will rest on the face of the shelf and conceal the open cutout while the mount tabs will drop into the routed pocket. Make sure the power supply is positioned as close to the outside edge of the transaction shelf as possible while ensuring the mount tabs stay inside the routed pocket, as shown in the illustration. (**Figure B**)
3. Secure the power supply to the shelf by screwing the supplied screws into the mount holes on the bracket and into the shelf.

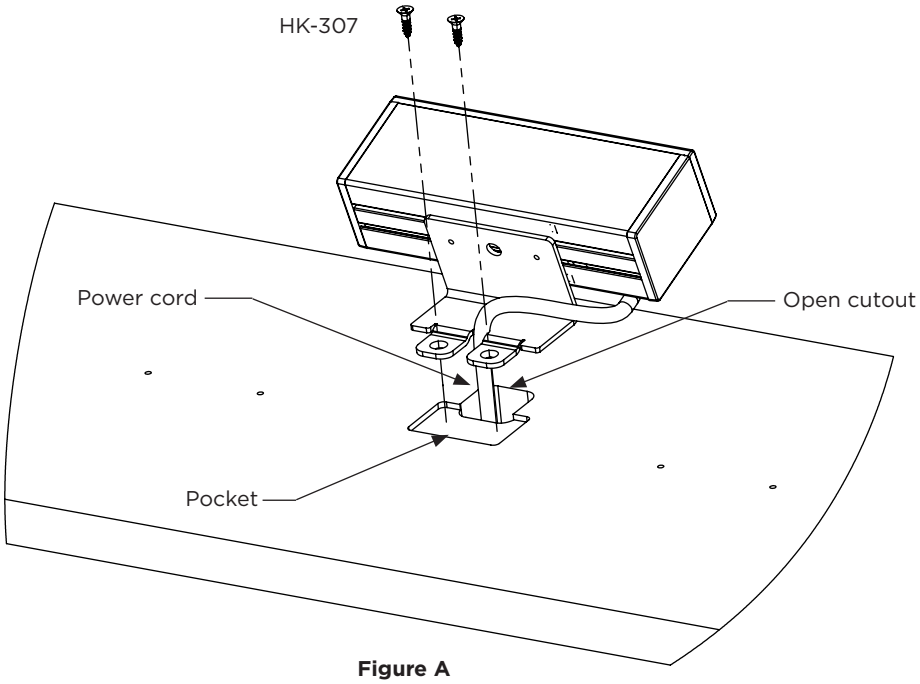

Figure A

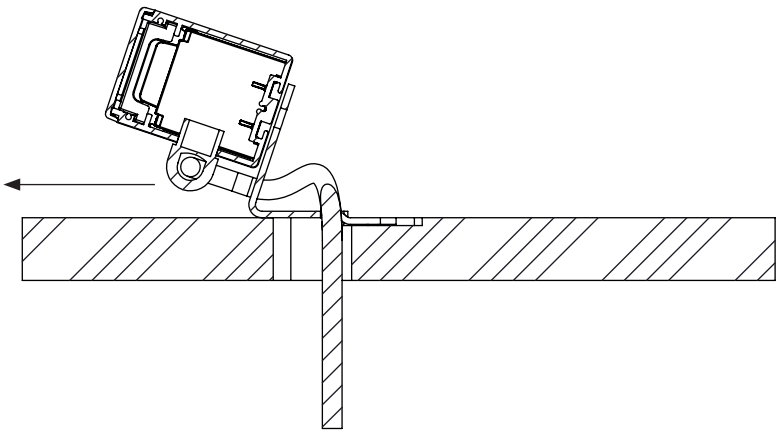

Figure B

Infill kits - full wall panel

Note: If power is specified, it must be installed prior to these steps. Review the power assembly instructions for full wall and privacy panels.

1. Using the transaction shelf step, proceed by installing the shelf onto the power raceway.
2. Next, locate the black wall infill brackets (quantity will vary depending on the size model that was chosen) and hardware to attach them: #8 pan head wood screws, T-nuts, and M8 button head cap screws. Attach all the lower brackets by locating the pre-drilled holes on the face of the transaction shelf and fastening the #8 screws through the smaller diameter holes on the bracket. **Note:** The orientation of the bracket to the shelf is not important, however, it is important that all brackets are oriented in the same direction to each other. Next, insert all of the T-nut's into the slot on the upper lateral beam. The T-nut's can be inserted by angling and sliding upwards into the channel and then letting them drop into place. The side with the protrusion should face downward. Then, partially thread the M8x12mm screws through the brackets and into the T-nut's as shown in the illustration. The screws will be fully tightened later on. (**Figure A**)

Note: The wall panels are shipped fully connected and will need to be separated prior to beginning this next step. Please refer to step 4 and reverse the procedure to disconnect the panels.

3. The wall panels are designed such that they are not handed and can be placed in any position. However, they will need to be installed in a specific sequence. Slide the first panel into position and align the pre-drilled holes on the panel with the countersunk holes on the wall infill brackets. Attach the panel using the #8 x ⅝" flat head wood screws. Fully tighten the M8 Screws on the upper brackets. (**Figure B**)

Continue to step 4.

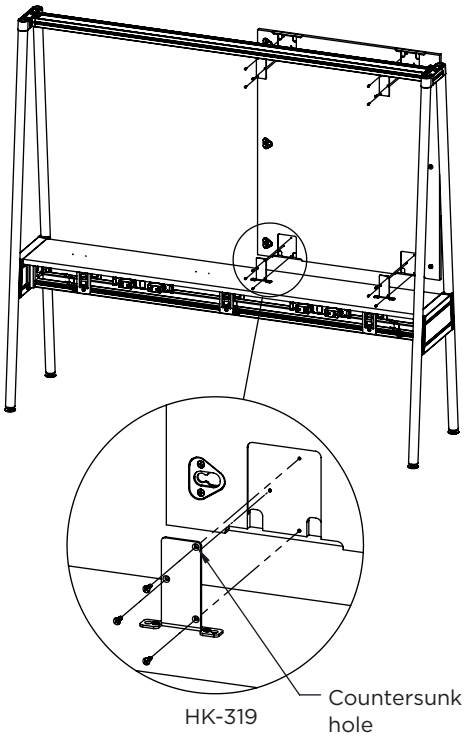

Figure A

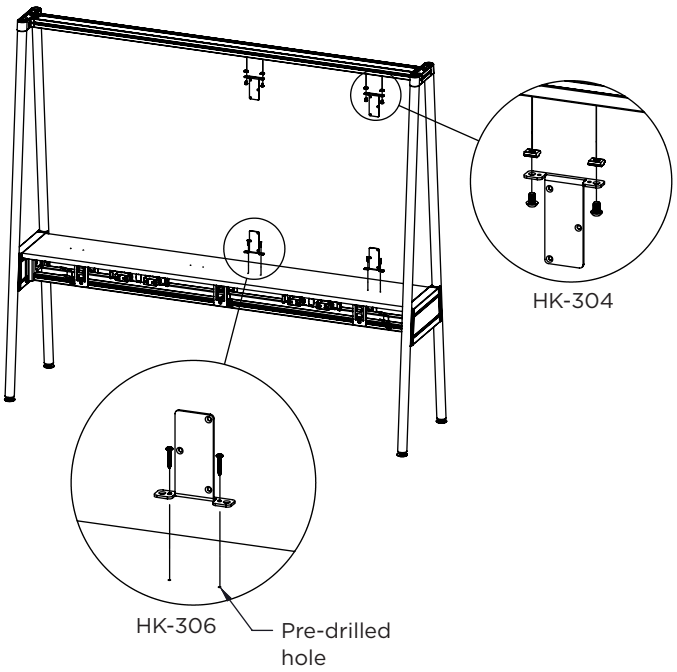

Figure B

Infill kits - full wall panel, continued

4. Each wall panel contains an equal amount of “male” and “female” concealed panel connectors. Locate the opposing, back side panel and slide it into position, making sure the button posts on one panel are aligned with the black retaining clips on the opposing panel. Slide and push the panel such that the button posts are inserted into the open keyway on the retaining clips. Once the posts are inserted and the panels are touching back to back, slide the panel over to fully engage the post into the retaining clip. The use of a bar clamp can be used to aid in this step. If applicable, repeat steps 2 & 3 for any remaining panels. Orientate the panel being screwed to the mount brackets the same as the panel from step 2 so that the concealed connectors travel in the same direction.

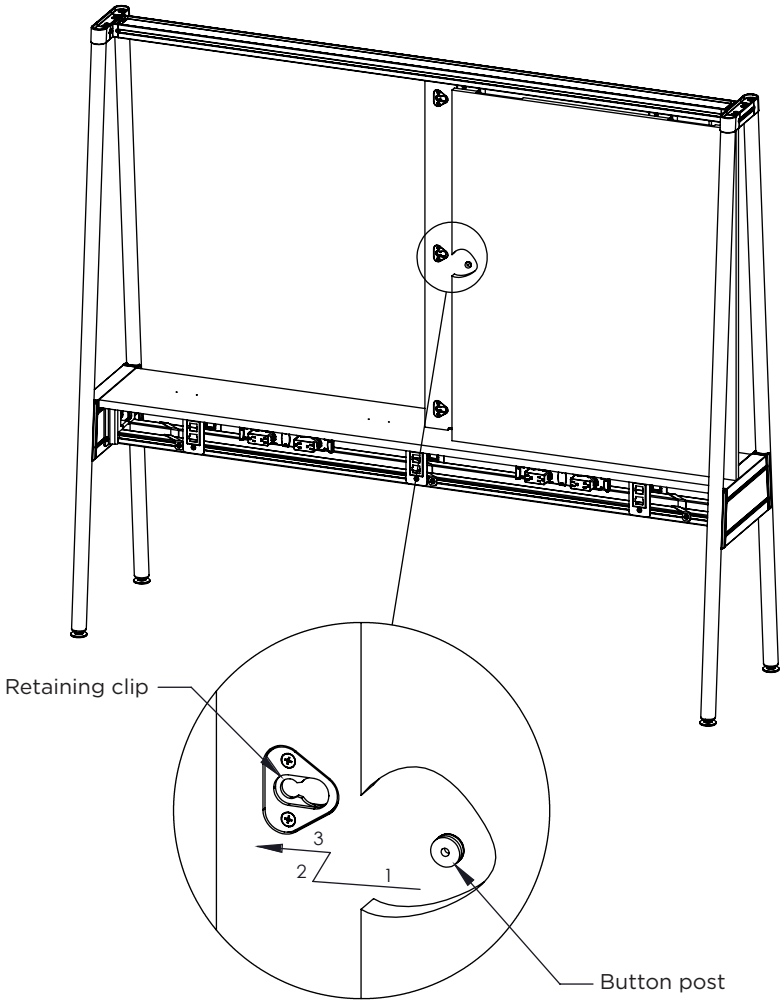

Infill kits - privacy panel

Note: If power is specified, it must be installed prior to these steps. Review the power assembly instructions for full wall and privacy panels.

1. Locate the black mounting pins and the #8 x 2″ screws to attach them. At this time, it is only necessary to permanently fasten one of the pins. For 70” & 82” units, insert the pin into the center hole of the back side of the transaction shelf and secure it using the #8 screws. (**Figure A**). For 58” units, insert the pin into one of the outermost slots and secure it using the #8 screws.
2. Attach the transaction shelf to the power raceway using the transaction shelf step.
3. Drop the privacy panel all the way down on the mounting pin until it has rested on the face of the transaction shelf. Insert the remaining mounting pins into the outermost slots on the transaction shelf and permanently fasten them at this time. (**Figure B**)
4. Secure the privacy panel by fastening the #8 x 2” wood screws through the transaction shelf and into the edge of the privacy panel. **Note**: Be careful not to over torque the screws.

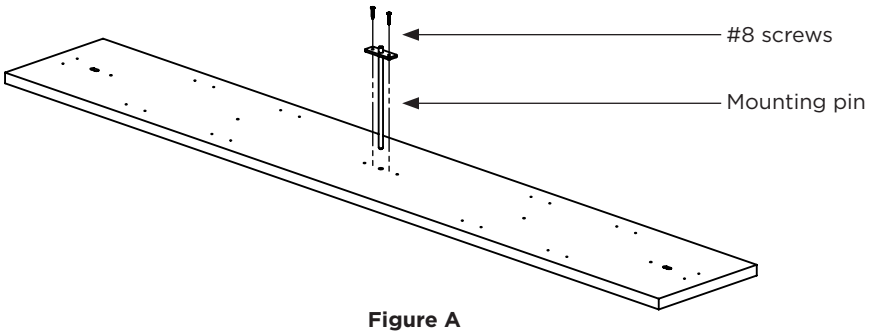

Figure A
(70″w kit shown)

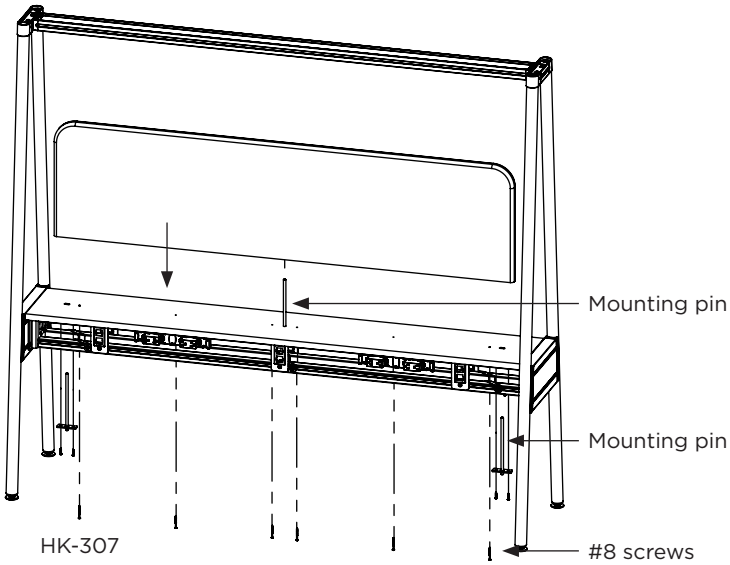

Figure B

Infill kits - open shelving

1. Using the transaction shelf step, proceed by installing the shelf onto the power raceway.
2. Assemble the framework for the shelves by slipping the uprights into the ends of the shelf beams as shown in the illustration. Align the mounting holes on the beams with the threaded holes on the uprights and partially fasten the pan head screws. (**Figure A**)
3. **Note**: If the upper lateral beam from the rail kit has been installed, please remove it at this time. Place the frame on top of the transaction shelf. Thread the 5/16-18 screws through the transaction shelf and into the tapped holes on the bottom of the shelf uprights. Do not fully tighten the screws at this time. (**Figure B**)
4. Place the upper lateral beam upside down on a flat non-marring surface. Install the M8 screw, flat washer, and T-nut onto the open slot of the upper lateral beam. The T-nut can be inserted by angling and sliding downward into the channel. The side with the protrusion should face upward. Thread the M8 screw with a flat washer into the T-nut. Position each flat washer as indicated in the detail view and then fully tighten the screw. (**Detail B**)
5. Drop the upper lateral beam onto the beam connectors on the support legs, making sure the alignment tabs on the shelf uprights slip into the open slot and that the flat washer and screw are inserted inside the tube. Fully tighten all screws at this time. (**Figure C**)

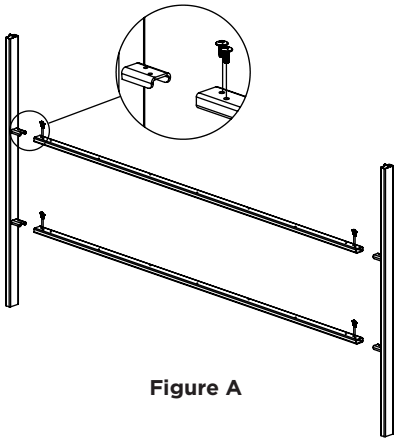

Figure A

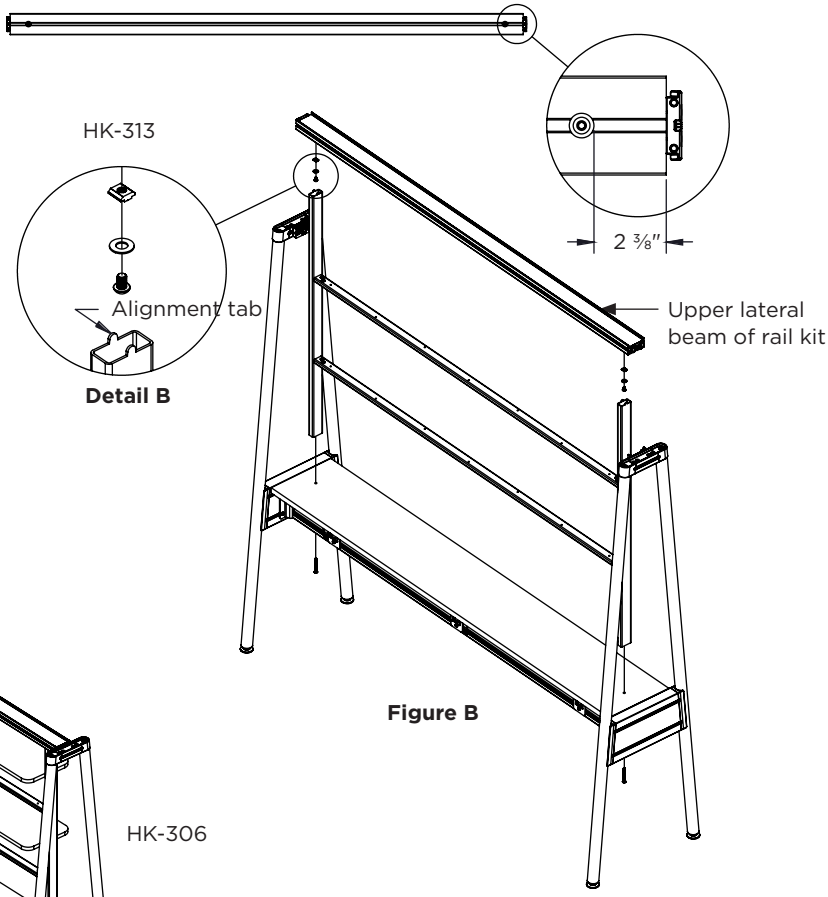

Detail B

Figure B

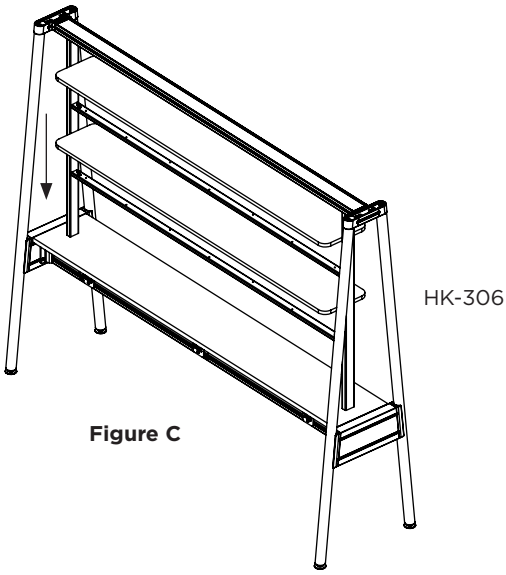

Figure C

Infill kits - organizer and planter box

Note: These following steps can be used for all styles of storage organizers and planter box kits.

1. Using the transaction shelf step, proceed by installing the shelf onto the power raceway.
2. Locate the two dowel pins. Find the two corresponding holes on the bottom of the storage organizer or planter box. Insert the dowel pins, using a rubber mallet if necessary.
3. Place the storage organizer or planter box onto the transaction shelf, making sure the dowel pins align with the corresponding holes on the transaction shelf.
4. Secure the unit to the shelf by fastening the supplied #8 screws through the transaction shelf and into the edge of the unit. **Note**: Some specific models will require the #8 screw to go through the mount hole of the metal L bracket.

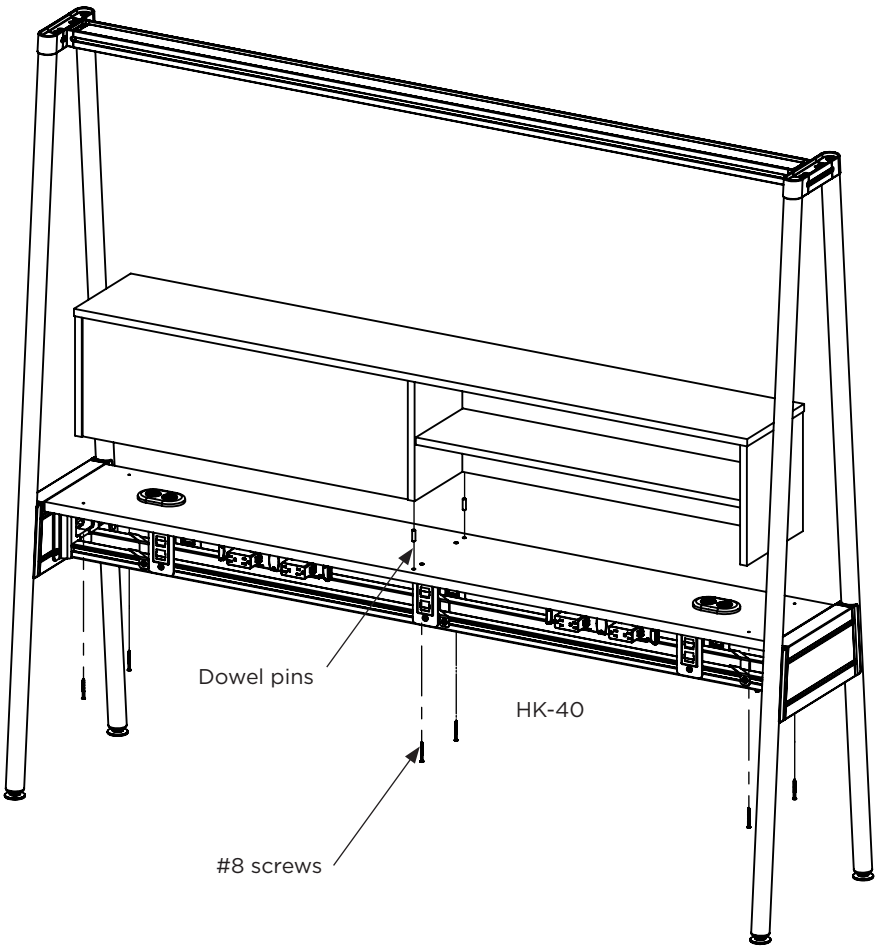

Worksurfaces - parallel runoff (FXBM mounting)

Note: The worksurface brackets can be attached to the power raceway. Depending on the model, this will include two or three brackets. The worksurface has been pre-drilled to locate the outermost brackets. If a third bracket is included, it can be placed as close to the center as possible.

1. Insert the T-nuts into the open slot on the upper support rail on the power raceway, as shown in the illustration. The T-nut can be inserted by angling and sliding upwards into the channel and then letting it drop into place. The side with the protrusion should face outward. Next, thread the M8x14mm screws through the bracket and into the T-nut, but do not fully tighten. Repeat this step for the remaining brackets. (**Figure A**)

Continue to step 2.

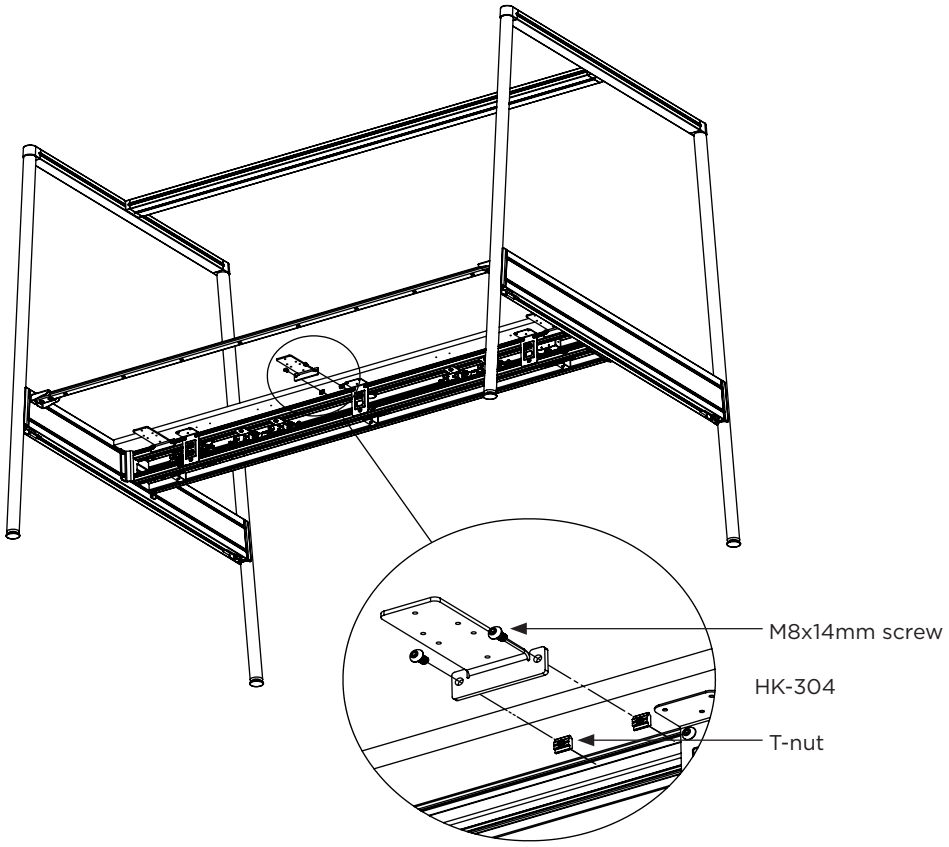

Figure A

Worksurfaces - parallel runoff (FXBM mounting), continued

3. Next, the worksurface beam can be attached to the support legs. Begin by inserting the T-nuts into the open upper slot on the inside of each support leg, as shown in the illustration. The T-nut can be inserted by angling and sliding upwards into the channel and then letting it drop into place. The side with the protrusion should face outward. Next, thread the M8x14mm screws through the bracket and into the T-nut, but do not fully tighten. Position the bracket such that the outside face aligns with the seam on the support leg. Fully tighten the screws and repeat for the remaining bracket. Lastly, drop the support beam onto the brackets and secure in place by fastening the ¼"-20 pan head screws. (**Figure B**)
4. Place the worksurface assembly onto the brackets and align the pre-drilled holes with the mount holes on the brackets. Secure the worksurface by fastening all the #8 screws in the mount holes on the brackets and support beam as shown in the illustration. Lastly, fully tighten all the M8 screws on the worksurface brackets. (**Figure C**)

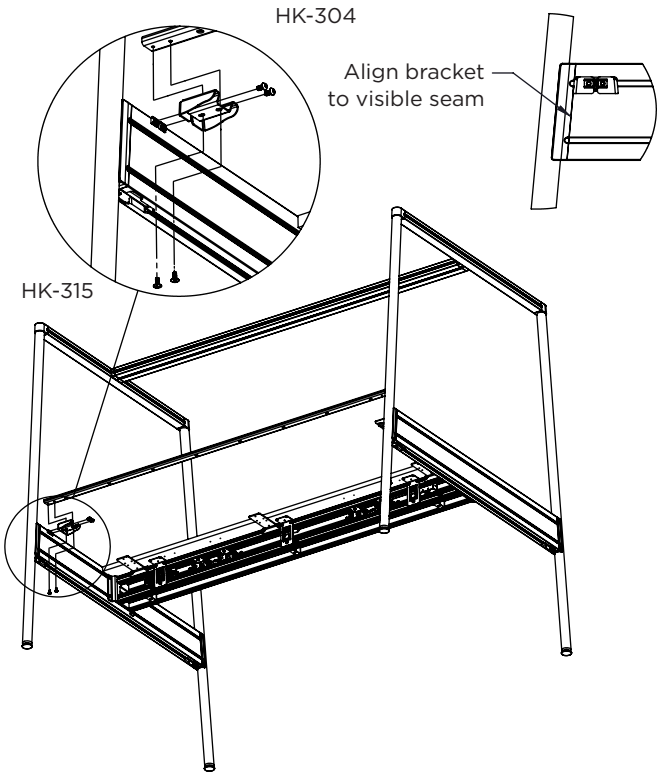

Figure B

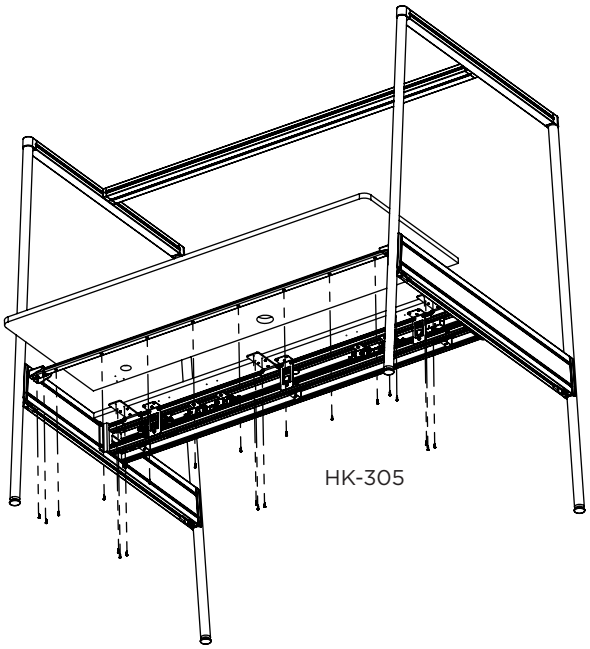

Figure C

Worksurfaces - parallel runoff (LHMB / LHFL mounting)

Note: The images for these installation steps show the LHMB connection. LHFL connection would be the mirrored version of these steps.

1. Place the worksurface face down onto a non-marring surface. Attach the post leg by fastening the supplied #12 screws through the mount plate and into the pre-drilled holes on the back side of the worksurface. (**Figure A**)

Next, the worksurface brackets can be attached to the power raceway and support leg. Depending on the model, this will include 3 or 4 brackets. The worksurface has been pre-drilled to locate the outermost brackets on the power raceway. The third bracket can be installed onto the support leg, located as close to the end of the leg as possible. If applicable, the fourth bracket can be placed as close to the center on the power raceway as possible.

2. Insert the T-nuts into the open slot on the upper support rail on the power raceway as well as the upper open slot on the support leg, as shown in the illustration. The T-nut can be inserted by angling and sliding upwards into the channel and then letting it drop into place. The side with the protrusion should face outward. Next, thread the M8x14mm screws through the bracket and into the T-nut, but do not fully tighten. Repeat this step for the remaining brackets. (**Figure B**)

Continue to step 3.

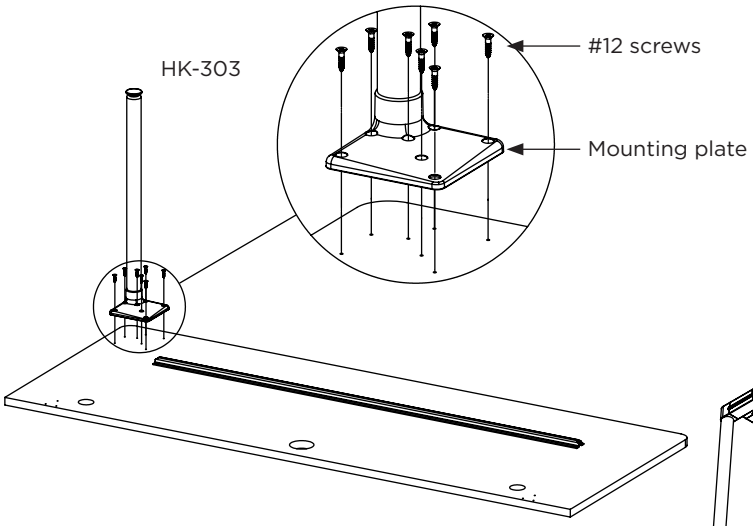

Figure A

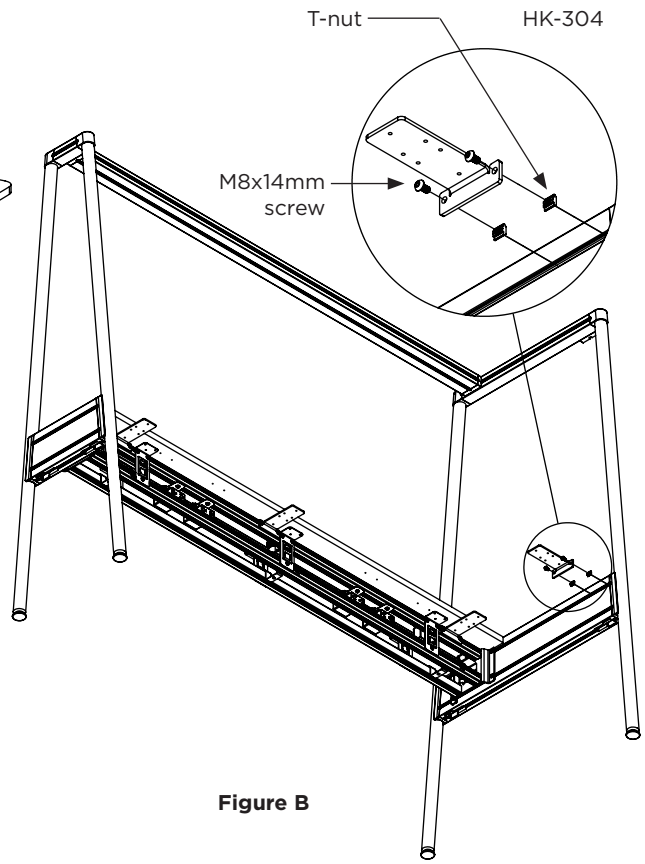

Figure B

Worksurfaces - parallel runoff (LHMB / LHFL mounting), continued

3. Place the worksurface assembly onto the brackets and align the pre-drilled holes with the mount holes on the brackets. Secure the worksurface by fastening all the #8 screws in the mount holes on the bracket as shown in the illustration. Lastly, fully tighten all the M8 screws on the worksurface brackets. (**Figure C**)

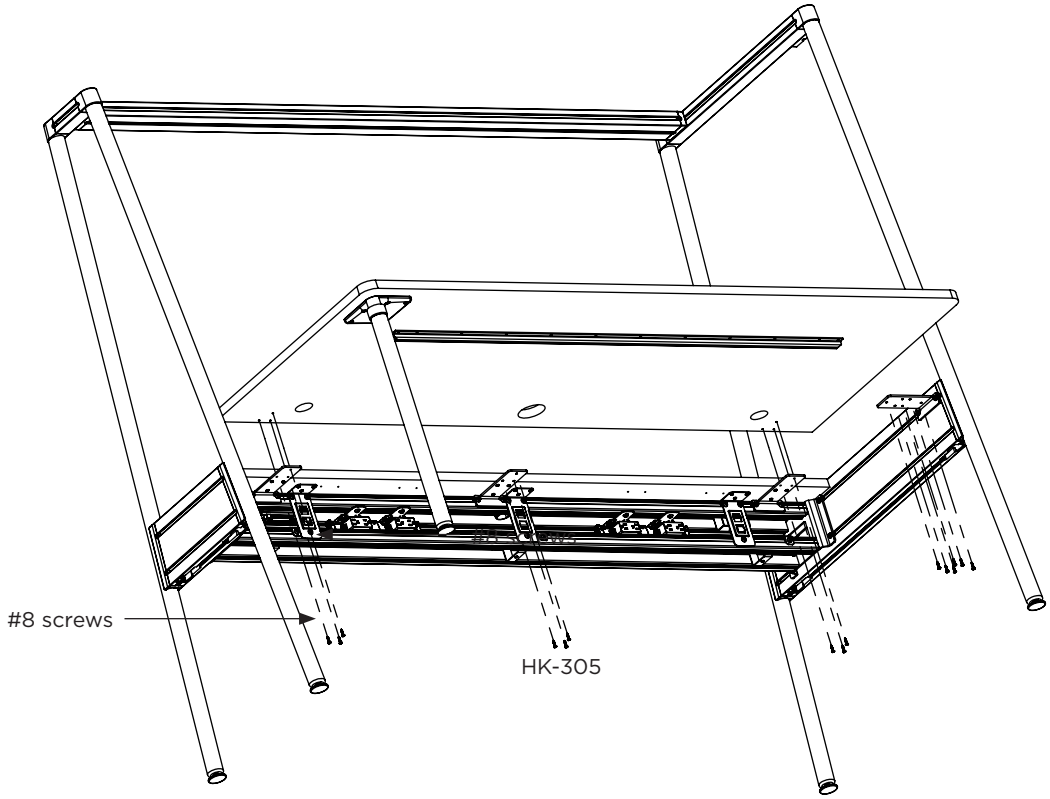

Figure C

Worksurfaces - parallel runoff (TWFL mounting)

1. Place the worksurface face down onto a non-marring surface. Attach the two post legs by fastening the supplied #12 screws through the mount plate and into the pre-drilled holes on the back side of the worksurface. (**Figure A**)

Note: Next, the worksurface brackets can be attached to the power raceway. Depending on the model, this will include two or three brackets. The worksurface has been pre-drilled to locate the outermost brackets. If a third bracket is included, it can be placed as close to the center as possible.

2. Insert the T-nuts into the open slot on the upper support rail on the power raceway, as shown in the illustration. The T-nut can be inserted by angling and sliding upwards into the channel and then letting it drop into place. The side with the protrusion should face outward. Next, thread the M8x14mm screws through the bracket and into the T-nut, but do not fully tighten. Repeat this step for the remaining brackets. (**Figure B**)

Continue to step 3.

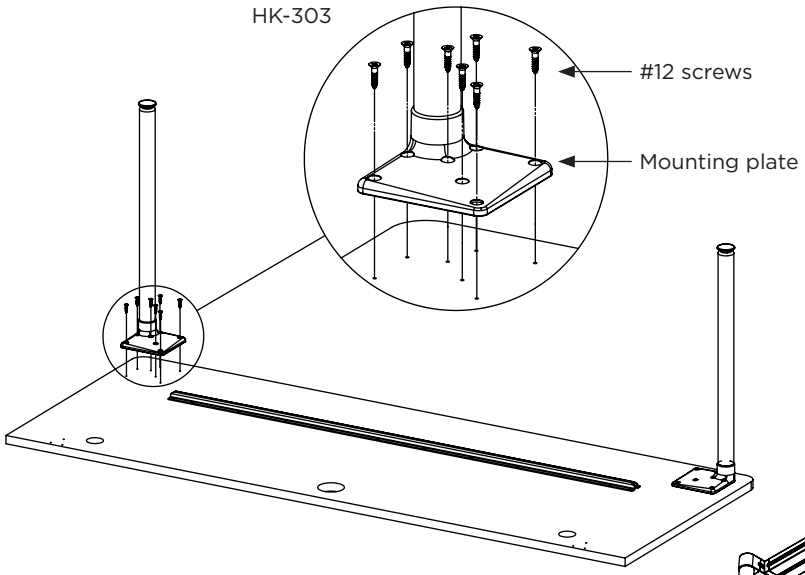

Figure A

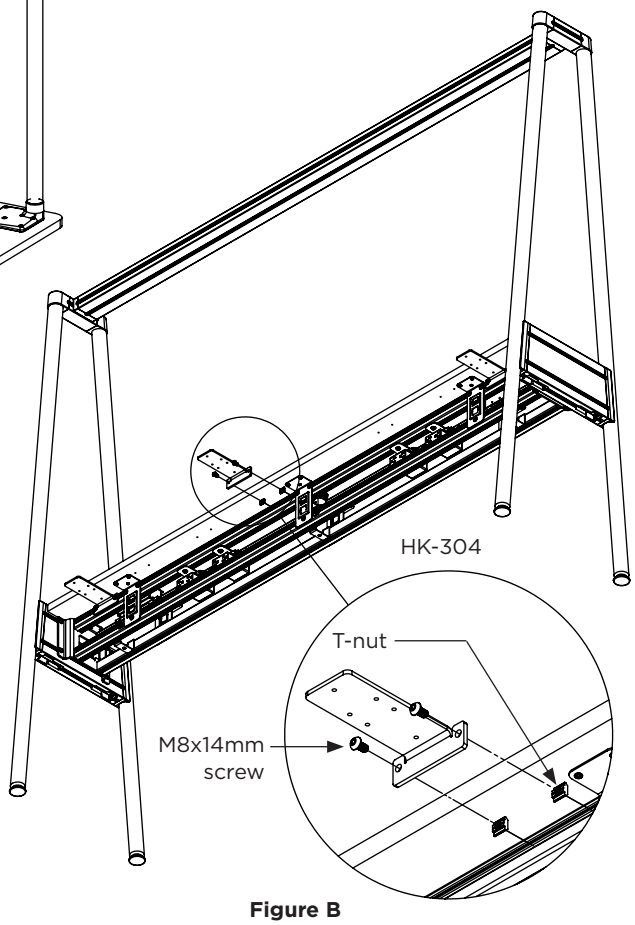

Figure B

Worksurfaces - parallel runoff (TWFL mounting), continued

3. Place the worksurface assembly onto the brackets and align the pre-drilled holes with the mount holes on the brackets. Secure the worksurface by fastening all the #8 screws in the mount holes on the bracket as shown in the illustration. Lastly, fully tighten all the M8 screws on the worksurface brackets. (**Figure C**)

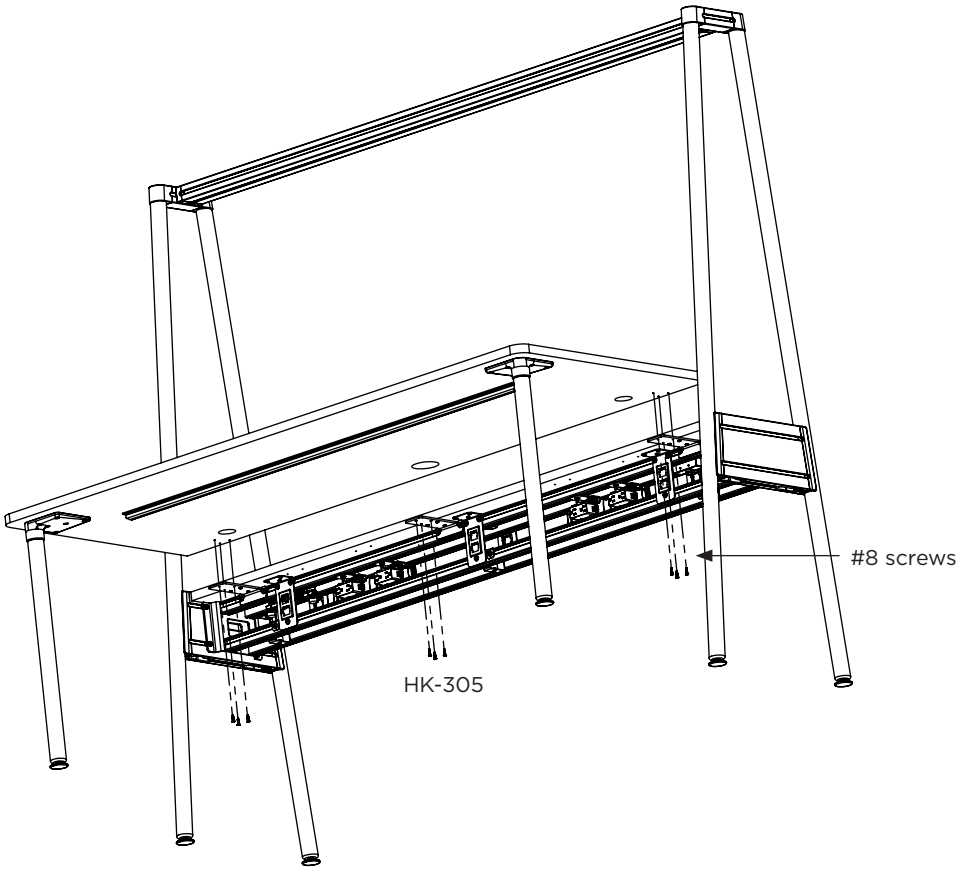

Figure C

Worksurfaces - single runoff

1. Place the worksurface face down onto a non-marring surface. Attach the two post legs by fastening the supplied #12 screws through the mount plate and into the pre-drilled holes on the back side of the worksurface. (**Figure A**)
2. Next, the worksurface brackets can be attached to the power raceway, or support leg. Depending on the model, this will include 2 or 3 brackets. The worksurface has been pre-drilled to locate the outermost brackets. If a third bracket is included, it can be placed as close to the center as possible. Insert the T-nuts into the open slot on the power raceway or support leg, as shown in the illustration (power raceway installation shown). The T-nut can be inserted by angling and sliding upwards into the channel and then letting it drop into place. The side with the protrusion should face outward. Next, thread the M8x14mm screws through the bracket and into the T-nut, but do not fully tighten. Repeat this step for the remaining brackets. (**Figure B**)
3. Place the worksurface assembly onto the brackets and align the pre-drilled holes with the mount holes on the brackets. **Note**: Trapezoid models are pre-drilled for both power raceway and end support leg mount locations. Secure the worksurface by fastening all the #8 screws in the mount holes on the bracket as shown in the illustration. Lastly, fully tighten all the M8 screws on the worksurface brackets. (**Figure C**)

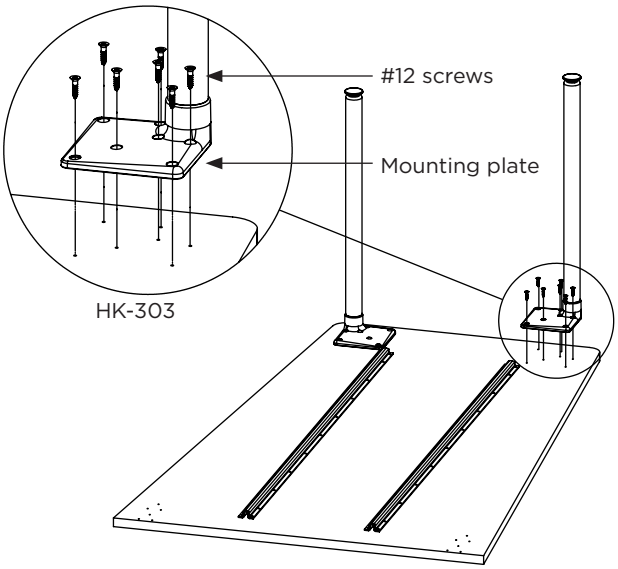

Figure A

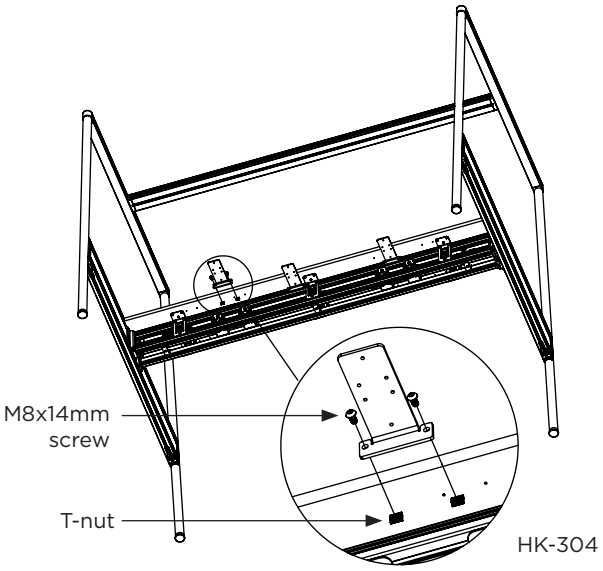

Figure B

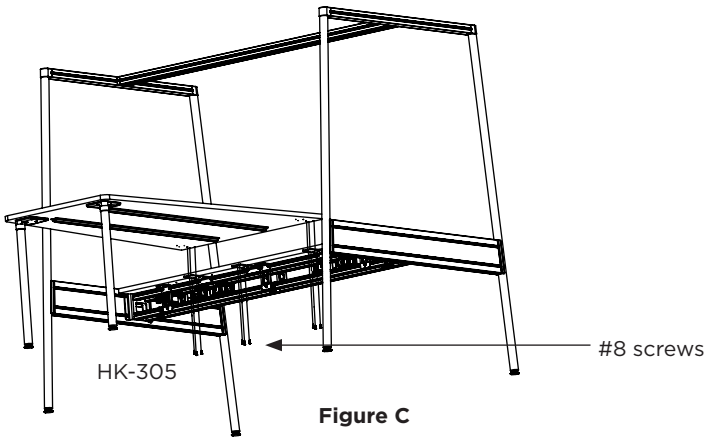

Figure C

Worksurfaces - double runoff

1. Begin installation by attaching the worksurface brackets and fixed beam brackets to the power raceway. First, insert all the applicable T-nuts into the open slot on the upper support rail on the power raceway, as shown in the illustration. The T-nut can be inserted by angling and sliding upwards into the channel and then letting it drop into place. The side with the protrusion should face outward. (**Figure A**)
2. Next, thread the M8x14mm screws through the worksurface bracket and into the T-nut, but **do not fully tighten** as the worksurfaces have been pre-drilled to fully locate these into place. Repeat this step for the remaining bracket. Now, thread the M8x14mm screws through the fixed beam bracket and into the T-nut. Position the bracket such that it aligns the vertical mounting holes with the pre-drilled holes on the transaction shelf, as shown in the illustration. **Note**: In a few select scenarios, it will be necessary to slightly shift the L bracket on the power raceway to gain access to the pre-drilled hole on the shelf. Fully tighten the M8 screws and also fasten the wood screws at this time. Repeat this step for the remaining beam bracket.
3. The lateral beam connector can now be attached. The T-nuts can be inserted into the open slot on the upper lateral beam using the same methodology from the previous step. Next thread the M8x14mm screws through the beam connector and into the T-nut, but do not fully tighten. Position the connector such that it is centered along the lateral beam. Fully tighten the screws once the connector is correctly positioned. (**Figure B**)

Continue to step 4.

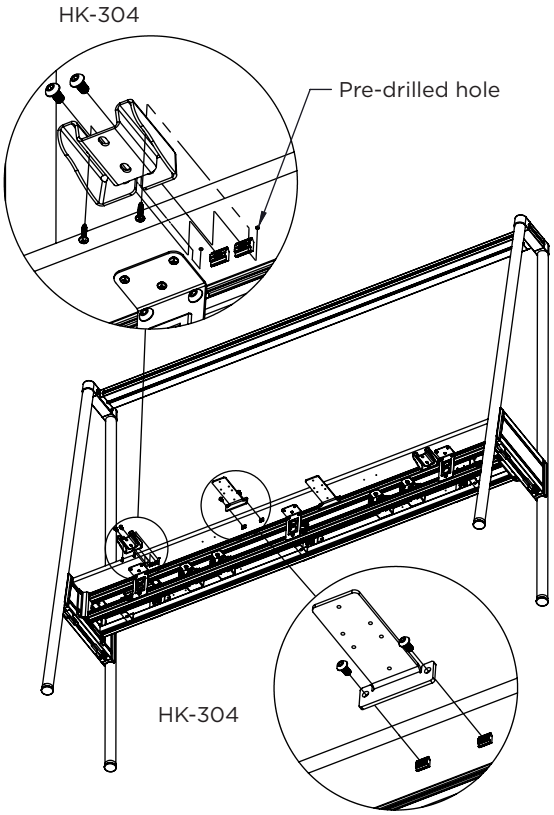

Figure A

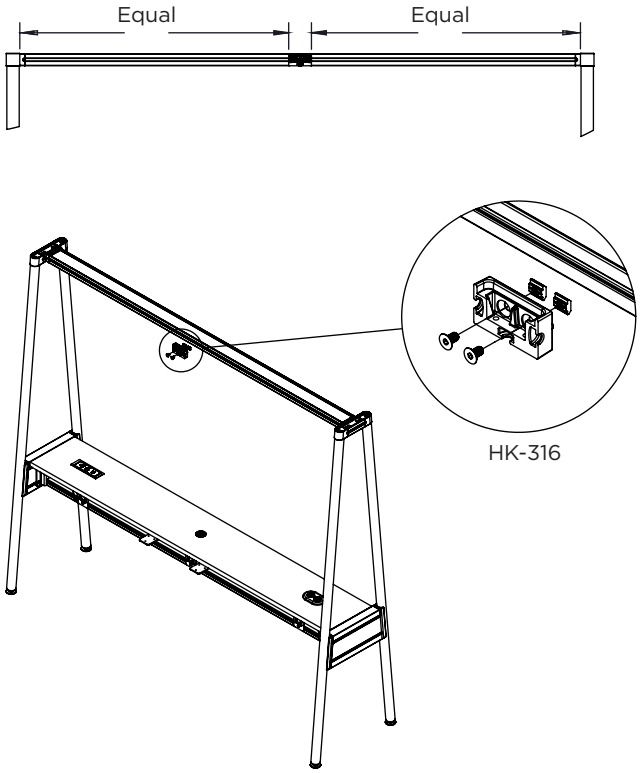

Figure B

Worksurfaces - double runoff, continued

4. The end support leg can now be prepped for installation. Using the same methodology from the previous steps, install the T-nuts onto the leg, followed by the worksurface brackets and fixed beam brackets. Once again, leave the worksurface brackets loosely attached. To position the fixed beam brackets, align the outside face of the bracket with the visible seam line on the end leg support rail. Once correctly placed, fully tighten the M8 screws. (**Figure A**)
5. It is now time to connect the end support leg to the main structure. Begin by inserting the fixed steel beams in between the transaction shelf and the fixed beam brackets. Next, slide the support leg over until the fixed beams are resting onto the beam brackets. Then, align the tapped holes on the fixed beams with the mounting slots on the beam brackets. Thread the ¼-20 screws through the beam brackets and into the fixed beam, but do not fully tighten yet. (**Figure B**)

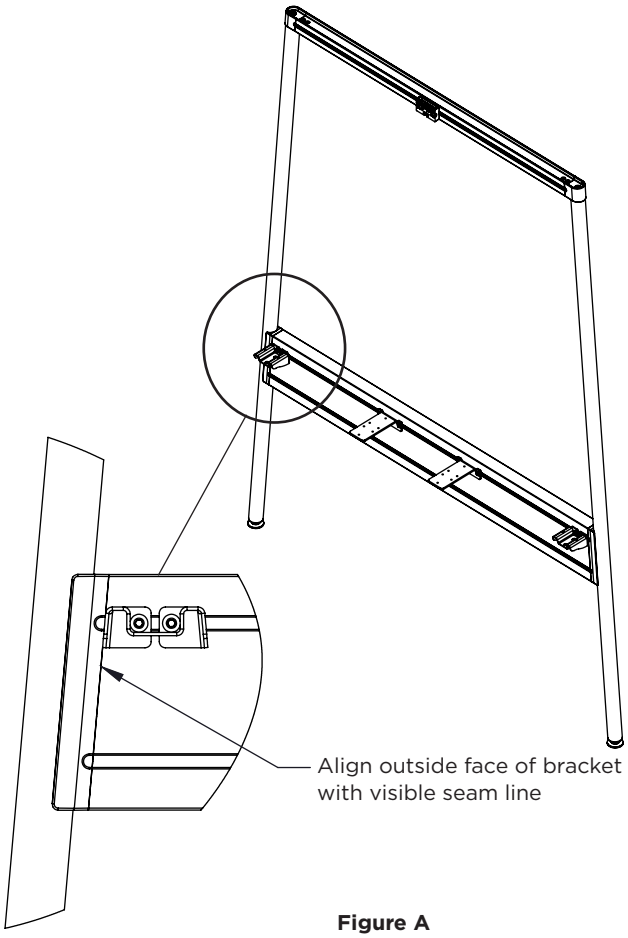

Figure A

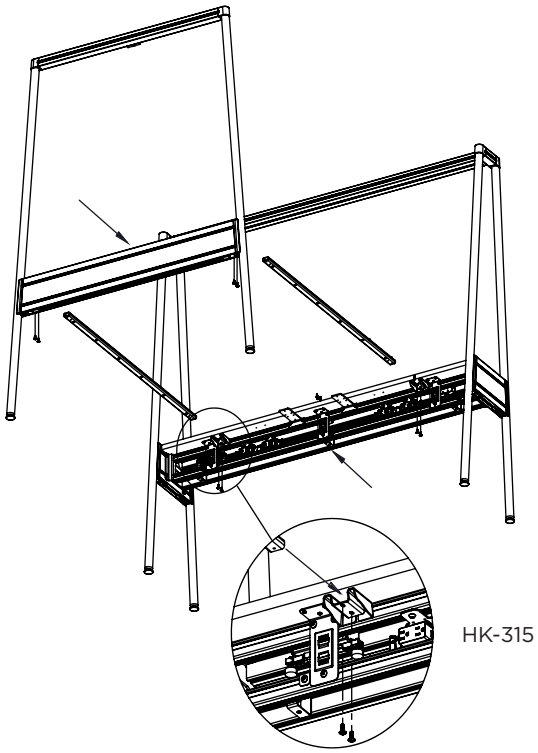

Figure B

Worksurfaces - double runoff, continued

5. Drop the upper lateral beam onto the modular connectors, as shown in the illustration. The modular beam will include an inside fitting connector on each end which is designed to self align to the outside fitting connectors. Once the beam has been engaged onto these connectors, thread the ¼-20 screws and fully tighten so that the beam will align and center itself. (**Figure A**)
6. Place the left and right hand worksurfaces onto the fixed beams and worksurface brackets. Position the worksurfaces such that they are symmetrical about the end support leg and that a 3 ⅝" gap is present in between the approach edges. If any gaps are present along the short sides of the worksurfaces, then firmly push the end support leg against the primary structure to close them shut. Align the pre-drilled holes on the worksurfaces with the mounting holes on the worksurface brackets. Secure the worksurfaces by fastening the #8 screws through all the brackets and beams and into the bottom of the work surfaces as shown in the illustration. Fully tighten all the M8 and ¼-20 screws from the previous steps. (**Figure B**)

If a center privacy panel is specified, continue to step 7.

For a shared wire manager, continue to step 8.

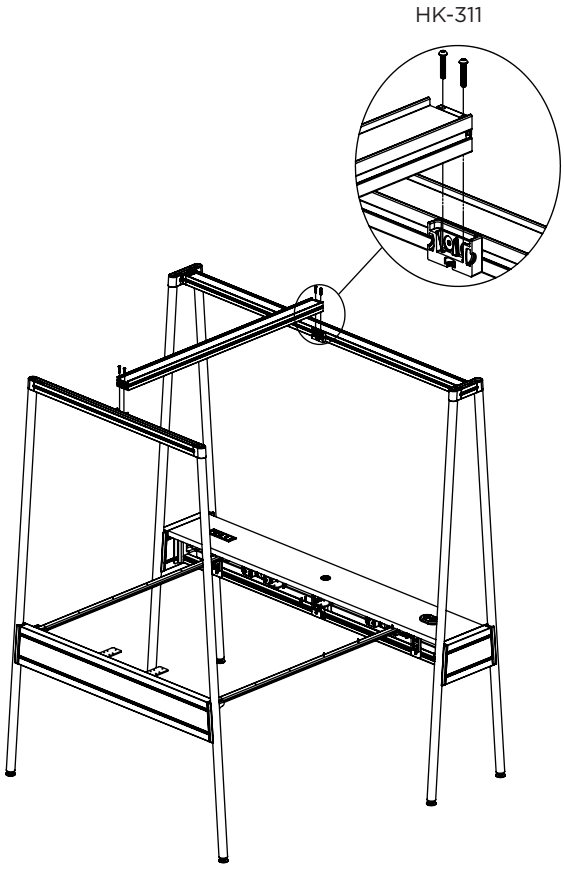

Figure A

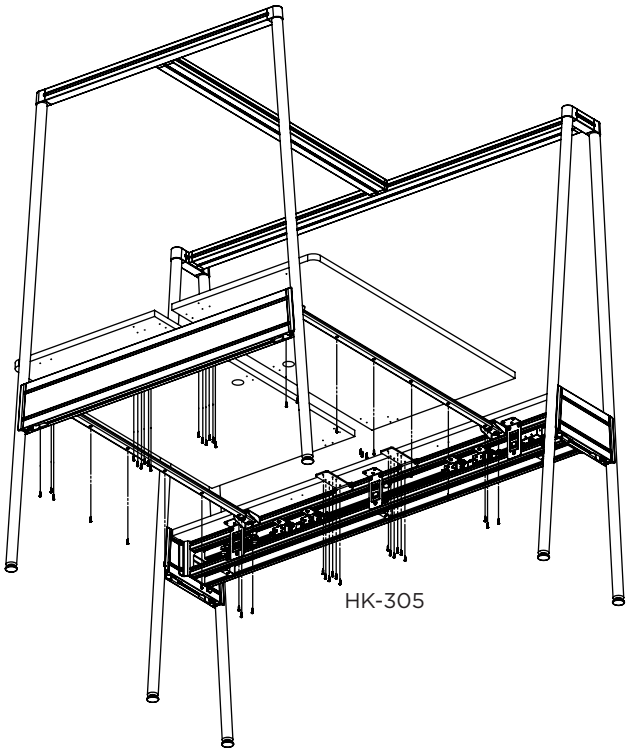

Figure B

Worksurfaces - double runoff privacy panel

7. If the privacy screen option was chosen, then begin installation by attaching the mounting pins to the worksurfaces. As shown in the illustration, secure the mounting pins by fastening the #8 screws through the mount holes and into the pre-drilled holes on the worksurfaces. Making sure the bored holes on the bottom of the privacy screen are aligned with the mounting pins, drop the privacy screen onto the mounting pins and push downward until it is fully seated. (**Figure A**)

8. If chosen, the mesh wire manager can be attached to the underside of the worksurfaces. There is no specific placement for the wire manager, however, it is suggested to place the sockets in 2.25” from the edge of each worksurface. Screw all the sockets onto the bottom of the worksurfaces, as shown in the illustration. Finish by snapping the buttons on the manager onto the recently installed sockets.

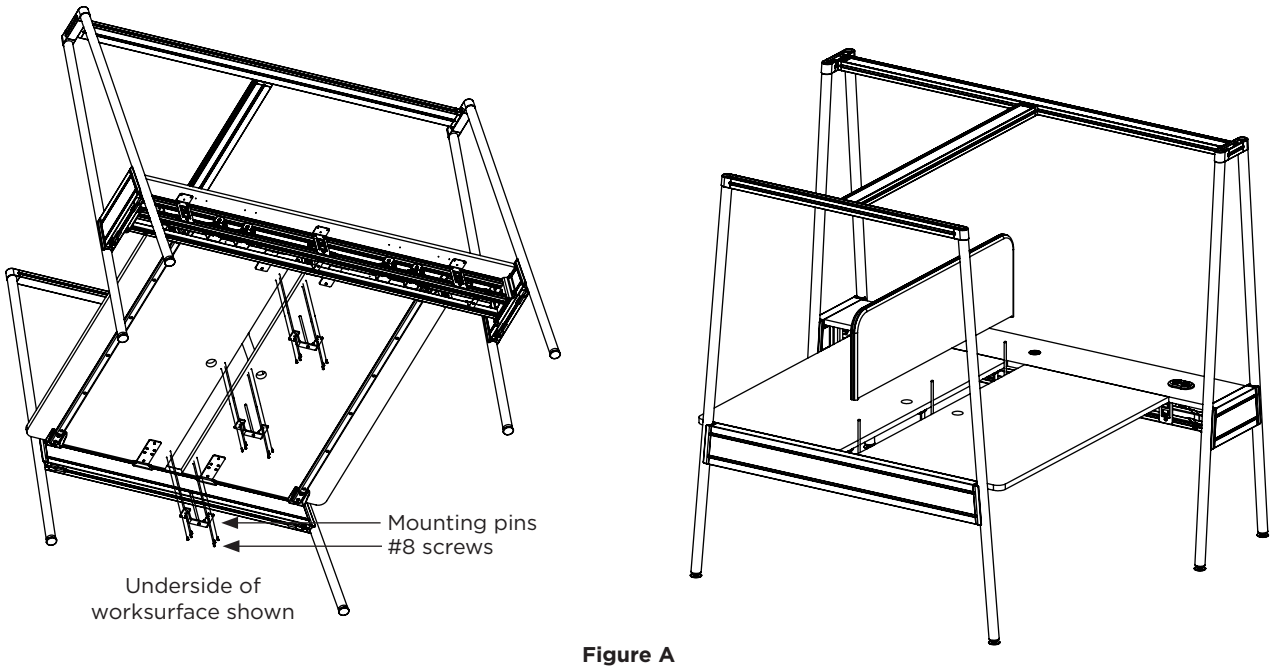

Figure A

Worksurfaces - double runoff canopy

Note: Canopy is only used with double runoff worksurface kits when full height A-Frame support leg is specified.

1. The canopy is composed of return beam modules and support leg modules. Separate the module types and begin the assembly by sliding the support leg module onto the return beam module via the interlocking joint. Repeat this step until all modules have been slipped together. (**Figure A**)
2. Place the canopy onto the beams making sure the resting flats are contacting the inside surface of the beams. (**Figure B**)

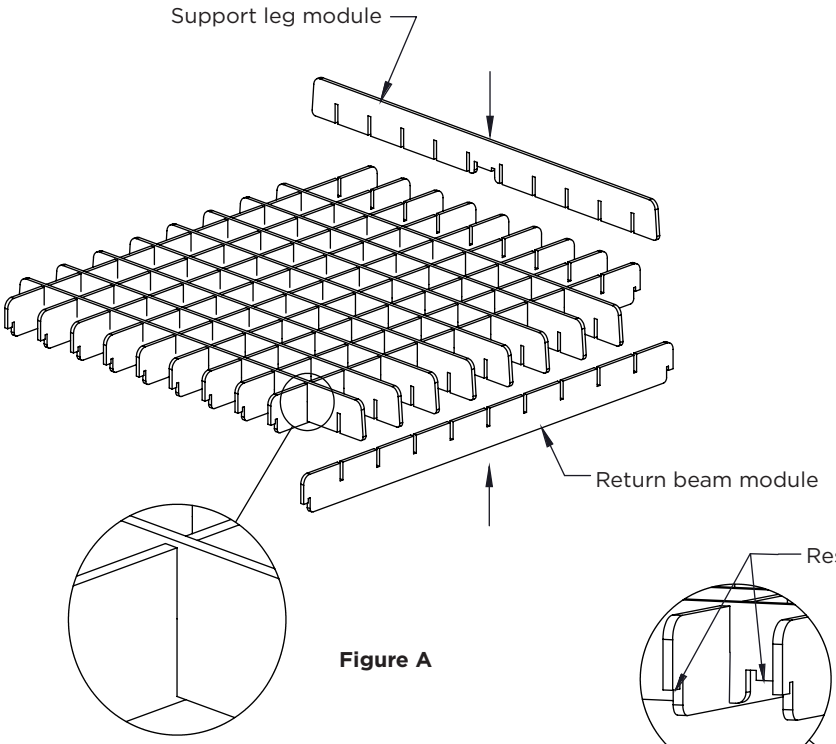

Figure A

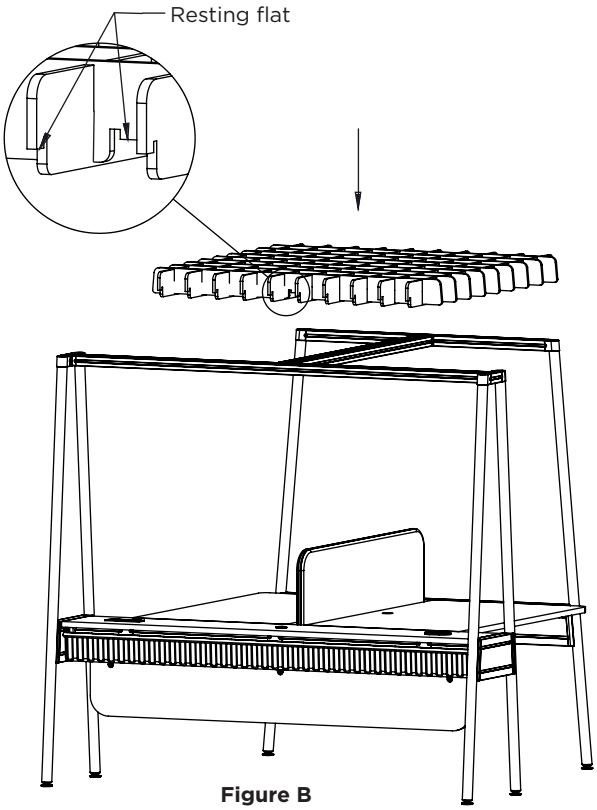

Figure B

Worksurfaces - media runoff

1. Attach the support leg using the instructions from Step 1 in the single runoff section.
2. Attach the runoff worksurface using the instructions from the Steps 2 and 3 in the single runoff section.
3. The wire management shroud is attached using self closing door hinges. Partially open the hinges on the shroud and clip them onto the mount plates on top of the worksurface, as shown in the illustration. Close the shroud and make any adjustments as needed. (**Figure A**)
4. After all the power and data cables have been fully routed and managed, the PET end cap can be installed to conceal them. Position the cap up against the bottom of the worksurface and push tight against the support leg. Secure the end cap to the worksurface by fastening the #8 screws through the flange and into the worksurface as shown in the illustration. (**Figure B**)

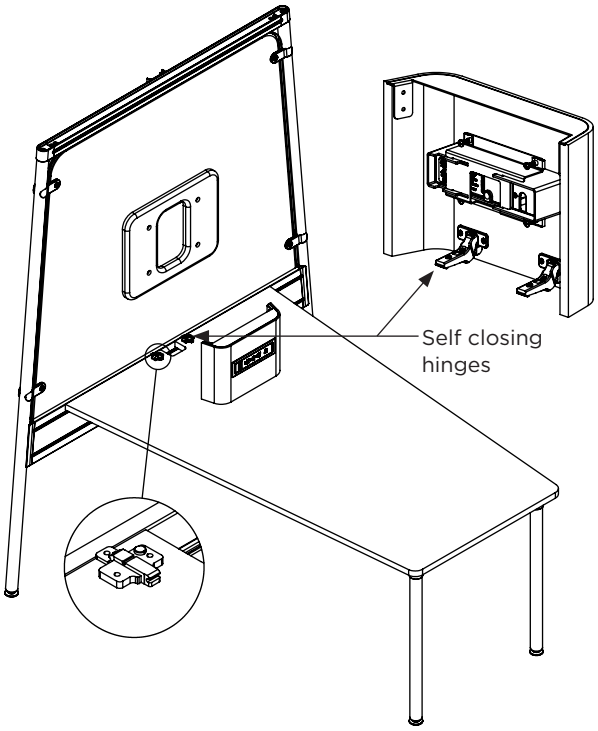

Figure A

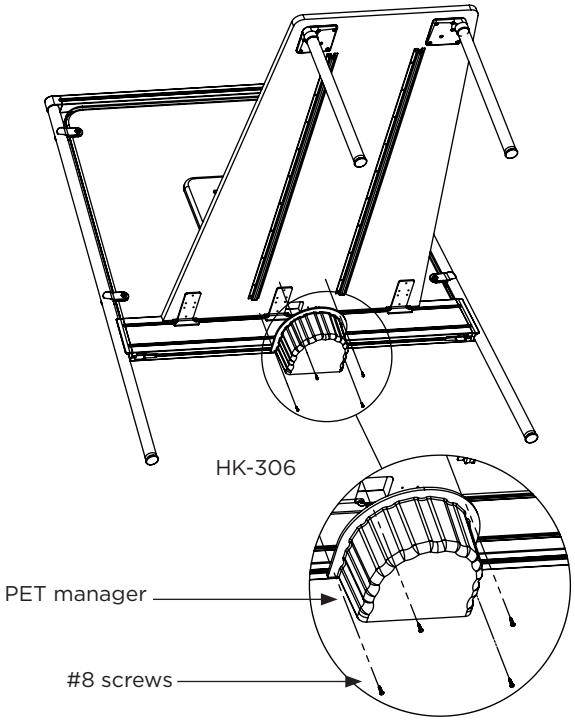

Figure B

Worksurfaces - gallery panel
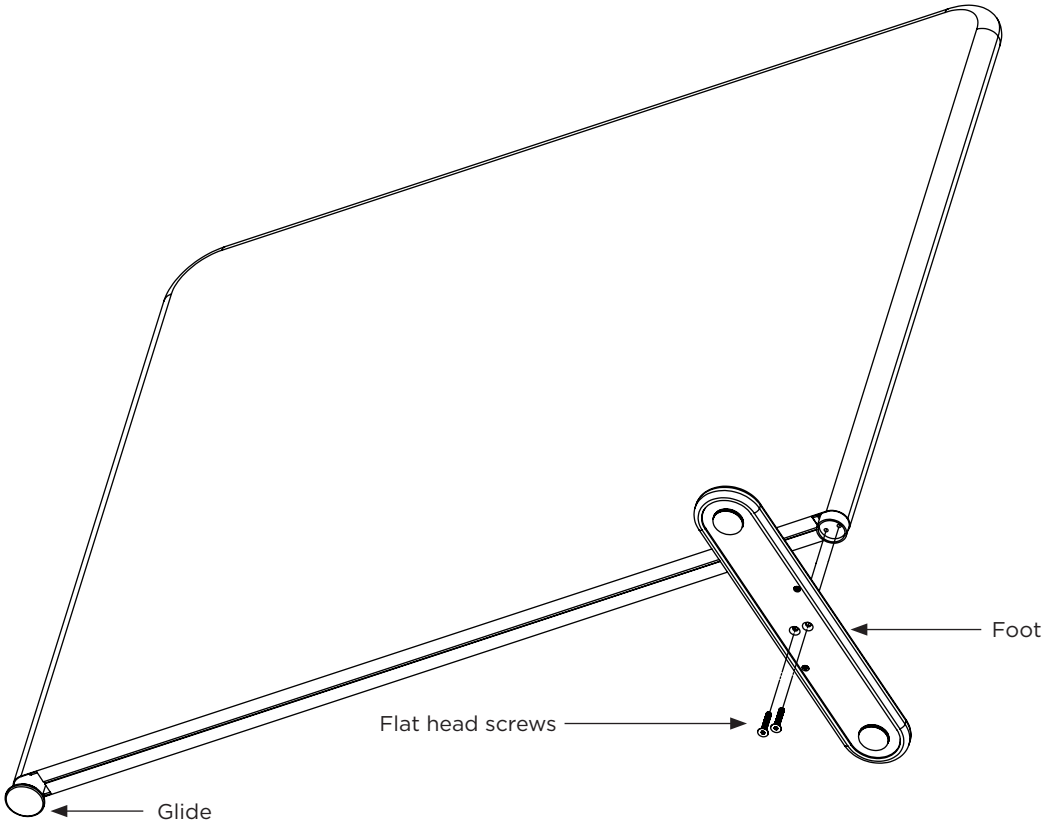
1. To assemble the gallery panel, begin by attaching the foot to the frame. Fasten the two ¼-20 flat head screws through the mount holes in the foot and into the threaded holes in the frame.
2. Level the frame by adjusting the threaded glide.