Staks Crossover assembly instructions

Installation Sequence

Tools required 4

Wall Panels

Connector kit part identification 5
T - 3 Panel Connection Preparation 6
X Panel Connection Preparation 7
T - 2 Panel Connection Preparation 8
In-Line Panel To Panel Connection Preparation 9
L Panel Connection Preparation 10
T - 3 Panel Connection Preparation 11
X Panel Connection Preparation 12
High Point of Floor Intersection Preparation 13
Assembly 14
Starter Post Installation 15
120˚ Corner Unit Installation 16-17

Pedestal Preparation

Drawer removal 18
Shelf removal 19
Riser beam installation 20
Pedestal bracket installation 21
Pedestal installation 22-23

Cantilever placement

Low height tops 24
Worksurface height tops 25

Corner shelves

Mounting heights 26

Electrical installation

Power channel installation 27-38
Worksurface mounted 8 wire installation 39-41
4 Wire electrical installation 42-44

Installation Sequence, continued

Supports

Wing assembly	45
Straightener rail installation	46
H-base installation	47
Mbar modesty bar installation	48
Worksurface support installation	49-50

Worksurface installation

Top placement	51
Clamp plate installation	52
L-bracket installation	53
Riser support installation	54
T-support installation	55

Miscellaneous components

Shared shelf/organizer installation	56-57
Modesty installation	58-59
Privacy panel installation	60-61
Tackboard installation	62-63
Seat cushion installation	64
Wall mounted storage installation	65
Media panels	66

Tools Required

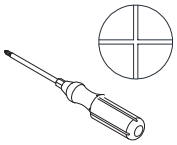
Panel clip

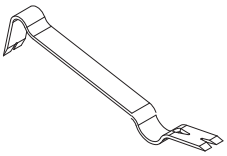
Panel jack (pry bar)

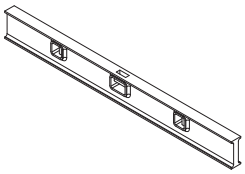
Level

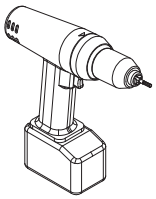
Cordless drill

2 ⅜″ hole saw

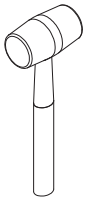
Rubber mallet

⅛″ Drill bit

3⁄16″ Allen wrench

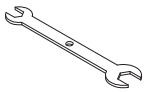
Leveler wrench

Cantilever gauge

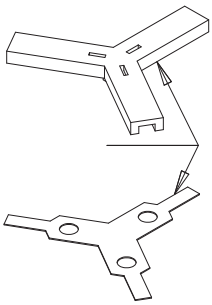
120° Panel gauge

Wall Panels
Connector kit part identification

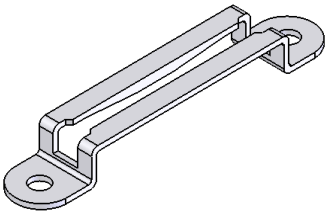

Panel clip

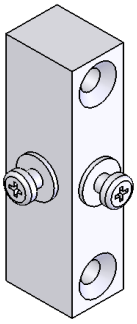

T connection screw block
2 shoulder screws (pre-installed)

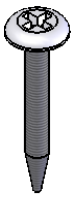

#8 X 1″ black phillips pan head screw
Use 2 for each panel clip when machined on edge of panel

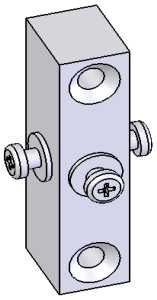

X connection screw block
3 shoulder screws (pre-installed)

#8 X ⅝″ black phillips pan head screw
Use two for each panel clip when machined on **face** of panel

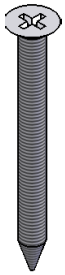

#8 X 2″ black phillips flat head screw
Use 2 for each screw block

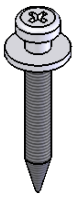

1″ shoulder screw
Use when clip pocket is machined on **edge** of panel

Wall Panels

Preparation- T-3 panel connection

Use panel connector kits PCK-1 or PCK-5 for 33″-35″

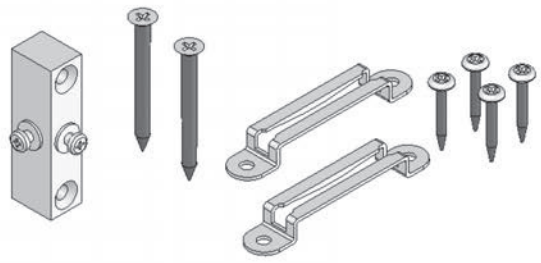

X 3 for PCK-1
(for 36″-48″ tall panels)

X 2 for PCK-5
(for panels up to 35″ tall)

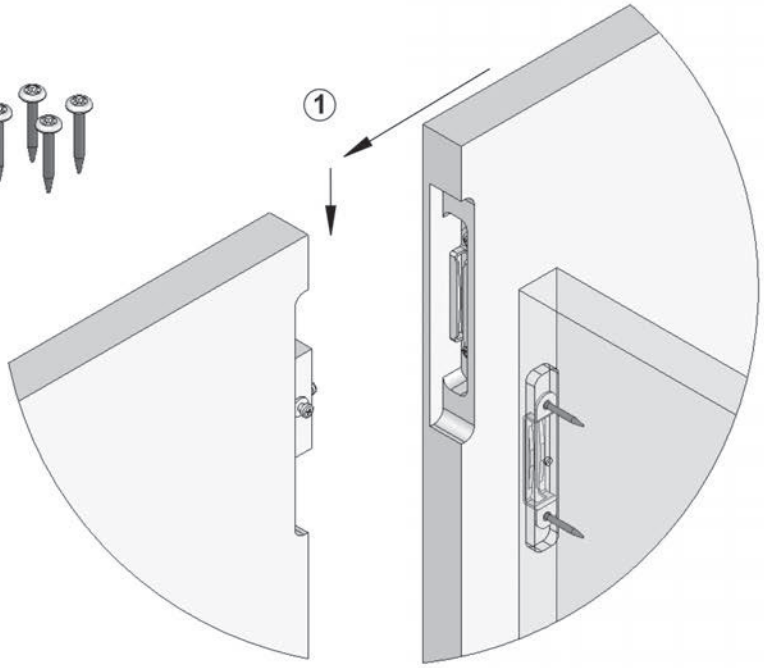

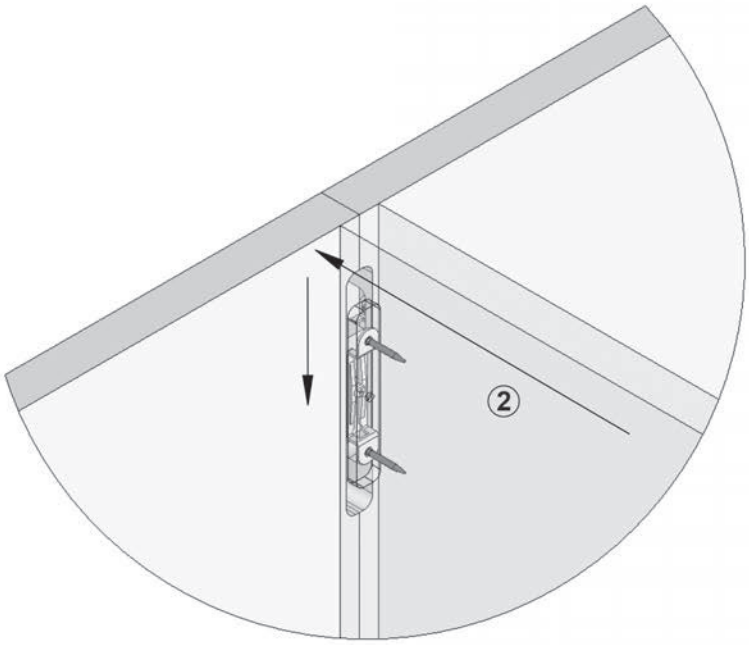

Wall Panels
Preparation- X panel connection

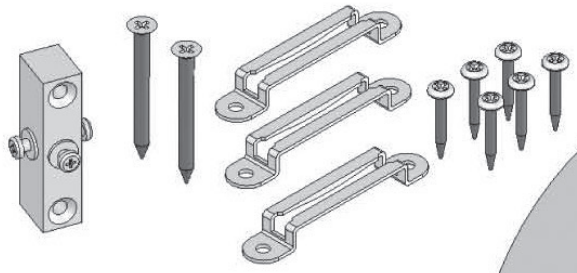

X 3 for PCK-2
(for 26″-48″ tall panels)

X 2 for PCK-6
(for panels up to 35″ tall)

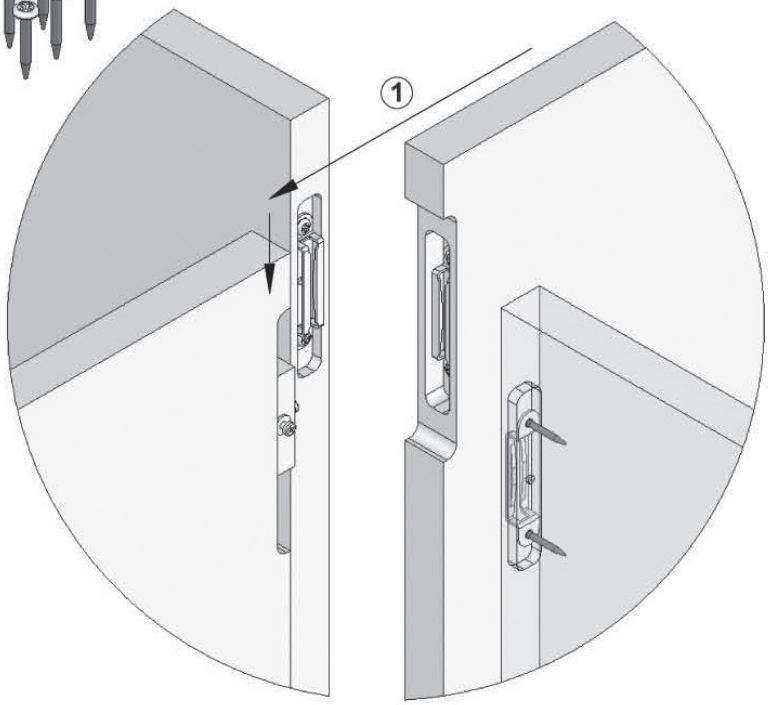

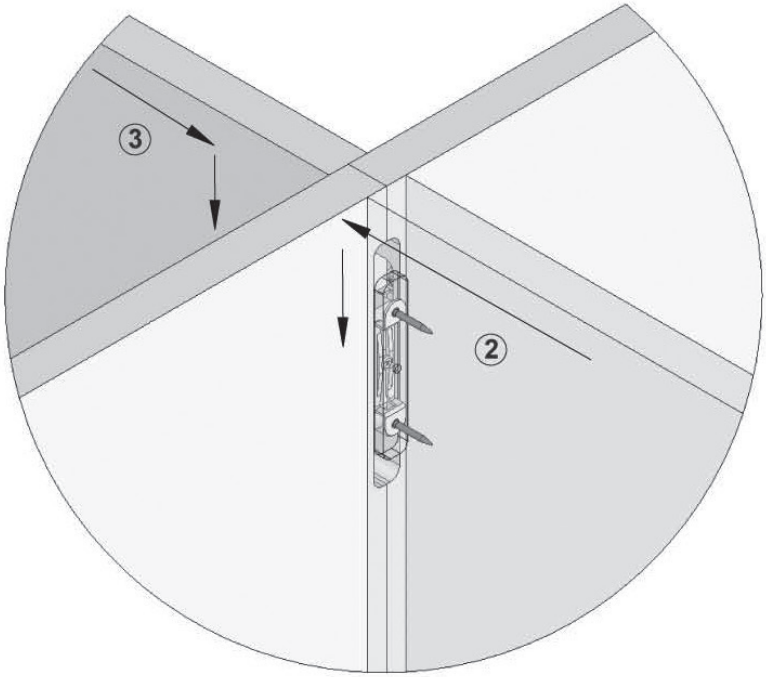

Wall Panels
Preparation- T-2 panel connection

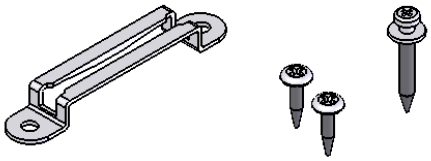

X 3 for PCK-13
(for 36″-48″ tall panels)

X 2 for PCK-14
(for panels up to 35″ tall)

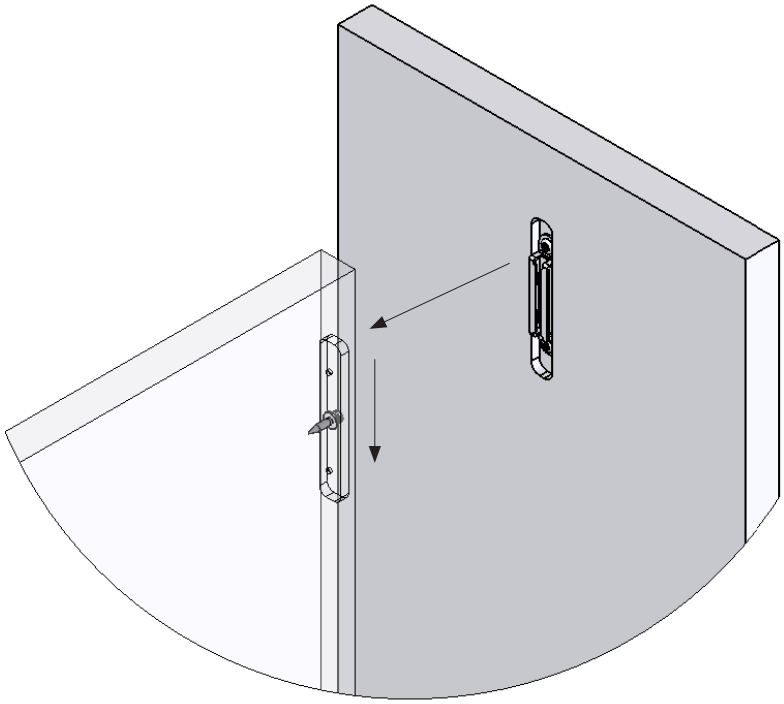

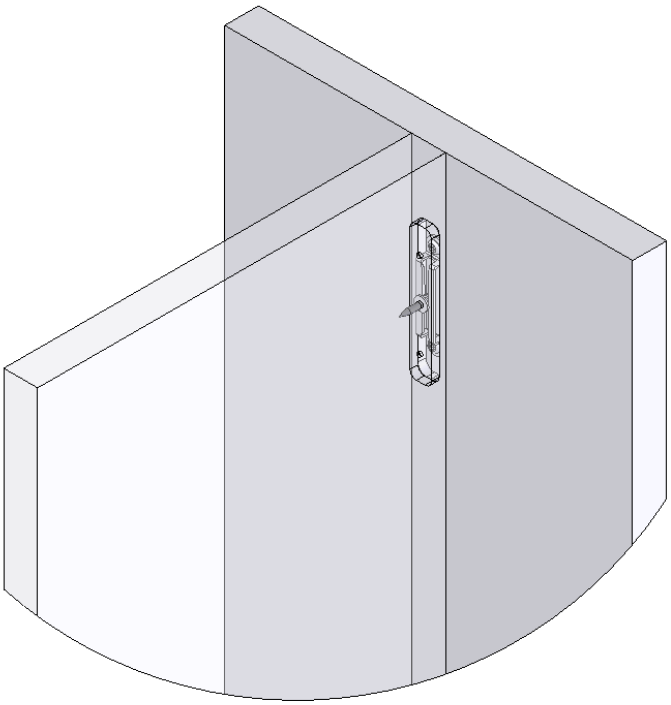

Wall Panels
Preparation- In-line panel to panel connection

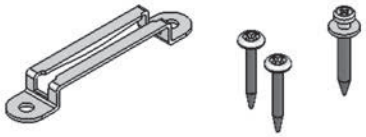

X 3 for PCK-3
(for 36"-48" tall panels)

X 2 for PCK-7
(for panels up to 35" tall)

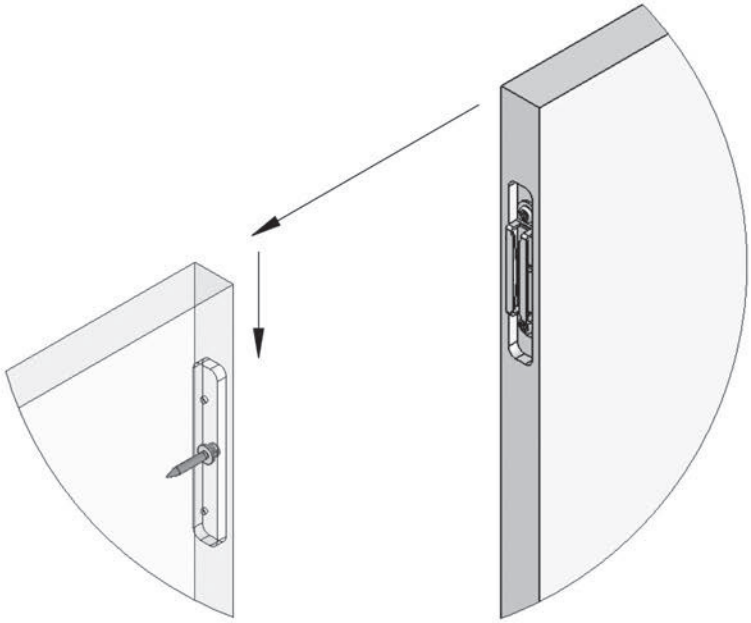

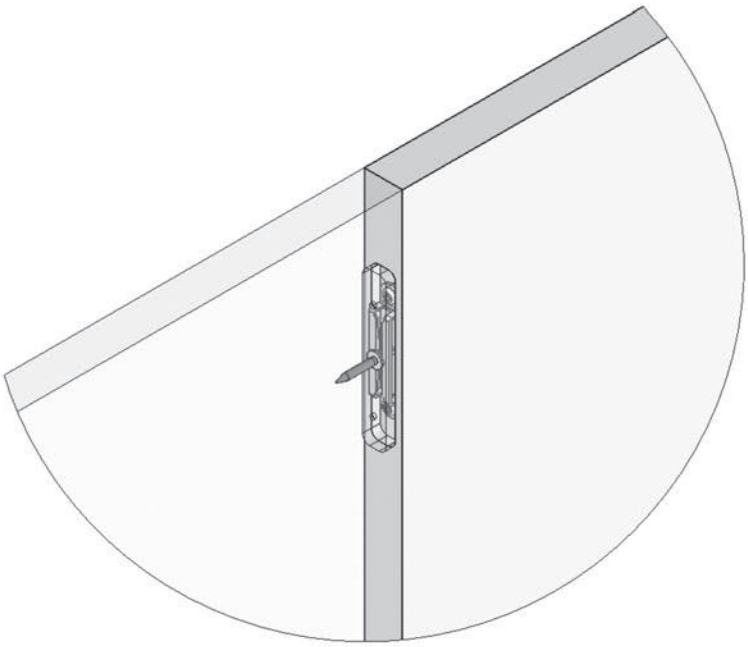

Wall Panels
Preparation- L panel connection

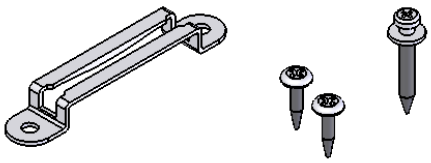

X 3 for PCK-13
(for 36"-48" tall panels)

X 2 for PCK-14
(for panels up to 35" tall)

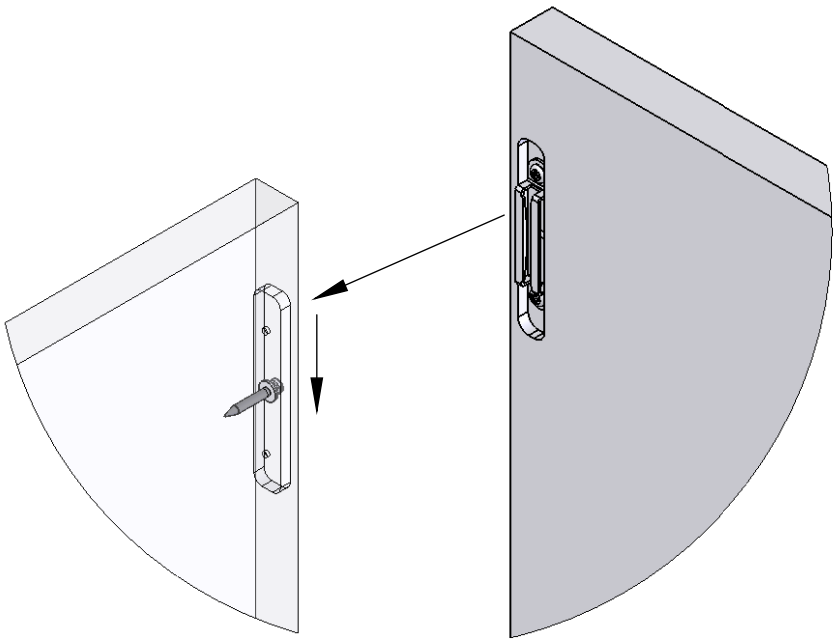

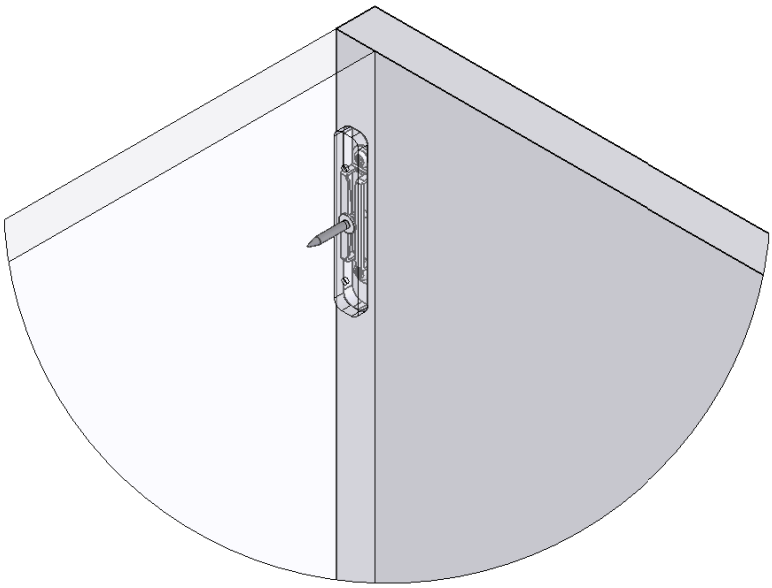

Wall Panels
Preparation- T-3 panel connection
(2) 42″ or 48″ tall panels connected to (1) 33″ panel

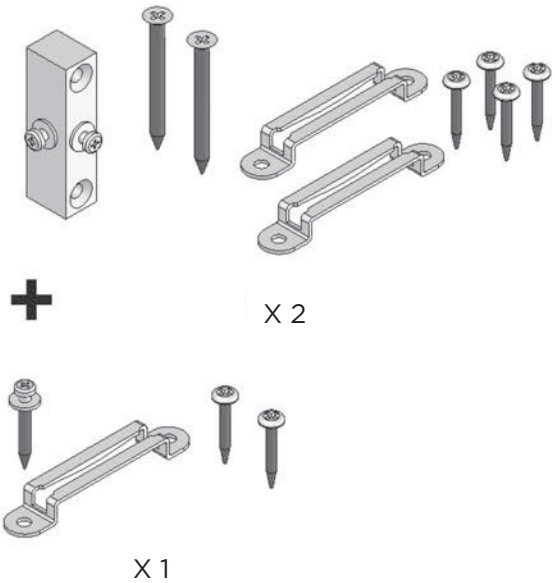

PCK-9

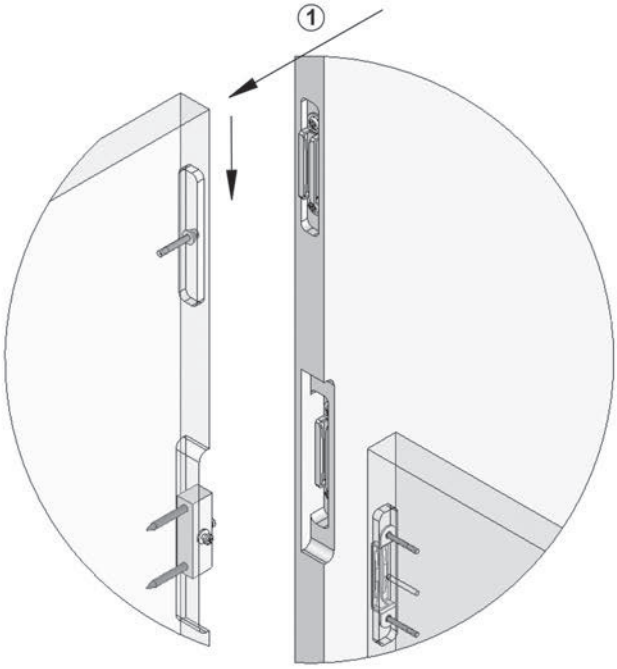

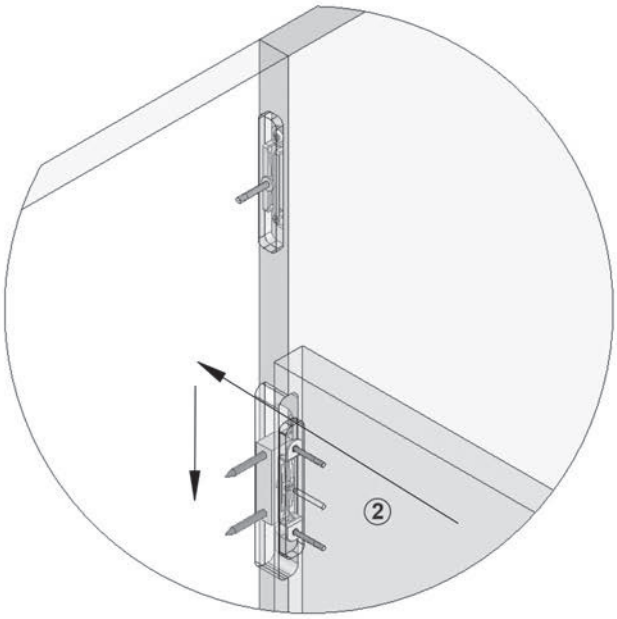

Wall Panels
Preparation- X panel connection
(2) 42″ or 48″ tall panels connected to (2) 33″ panel

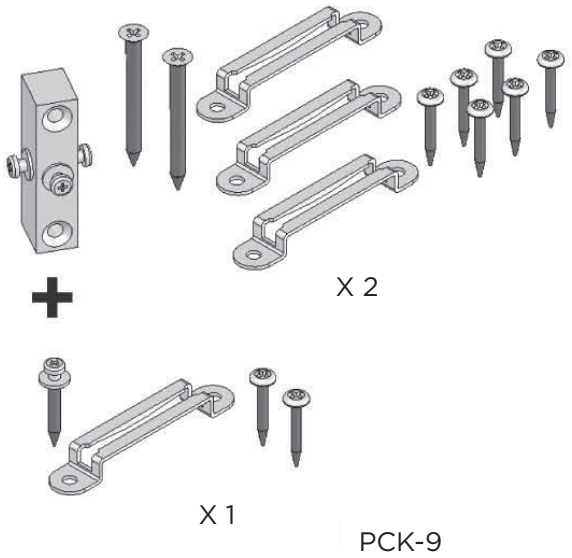

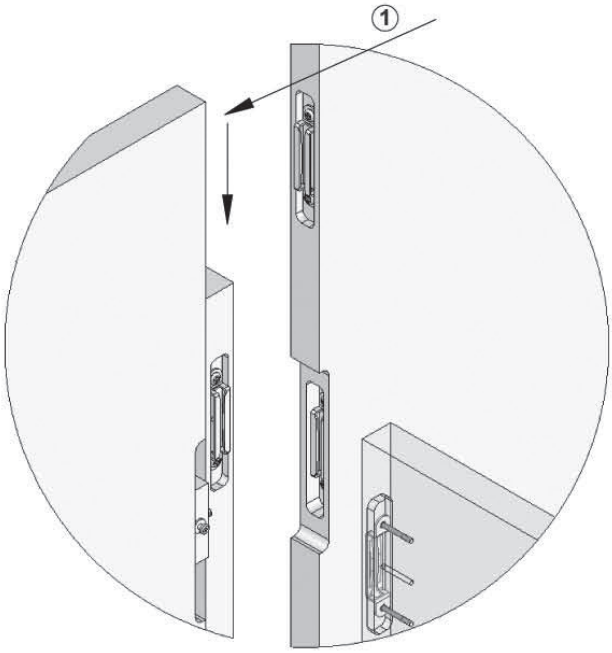

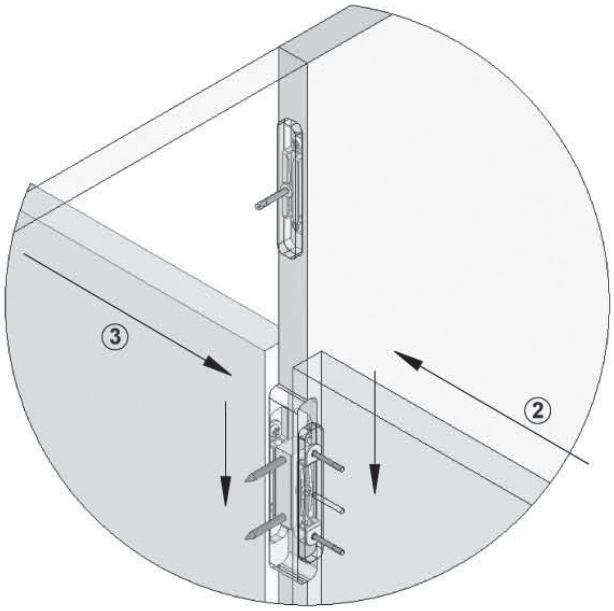

Wall Panels
Preparation- Intersection High Point
(2) 48″ tall panels connected to (1) 42″ panel

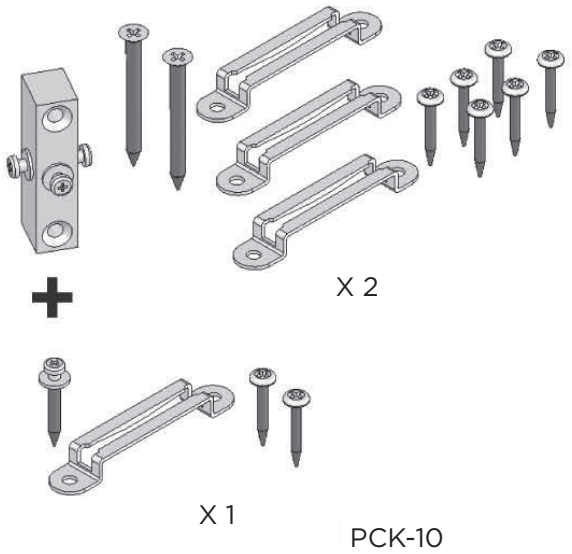

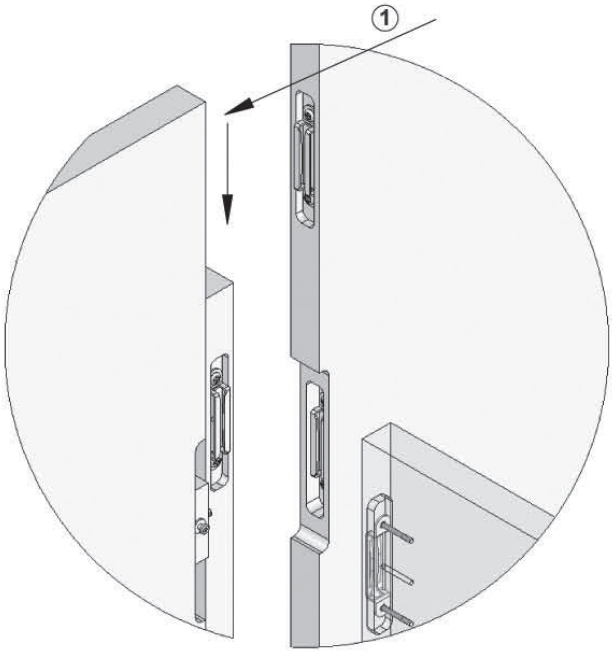

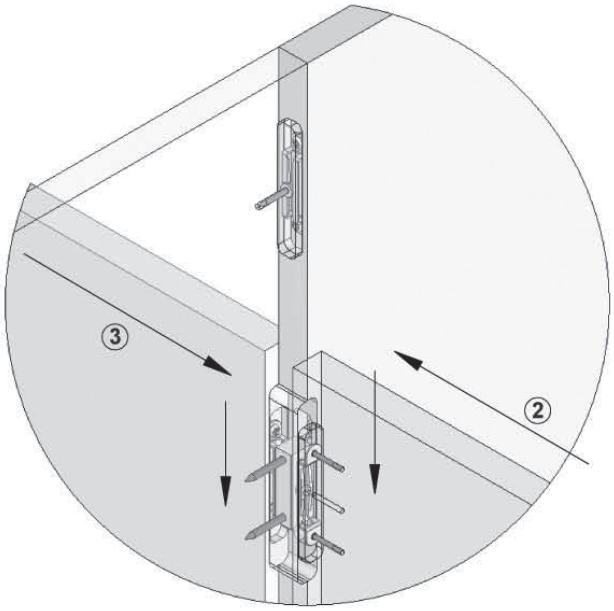

Wall Panels

Note: Leave shrink wrap and pack tags intact while staging panels for easier identification while installing.

See wall plan drawing for locations of panels, power infeeds, and data ports.

1. Check power and data locations before assembling panels.
2. Panel assemblies can be moved more easily before other components are installed.
3. Access holes can be more easily drilled before other components are installed.
4. Start installing panels at an intersection.
5. If possible, start panels are the highest point of an uneven floor.
6. Level all panels before attaching any other components.

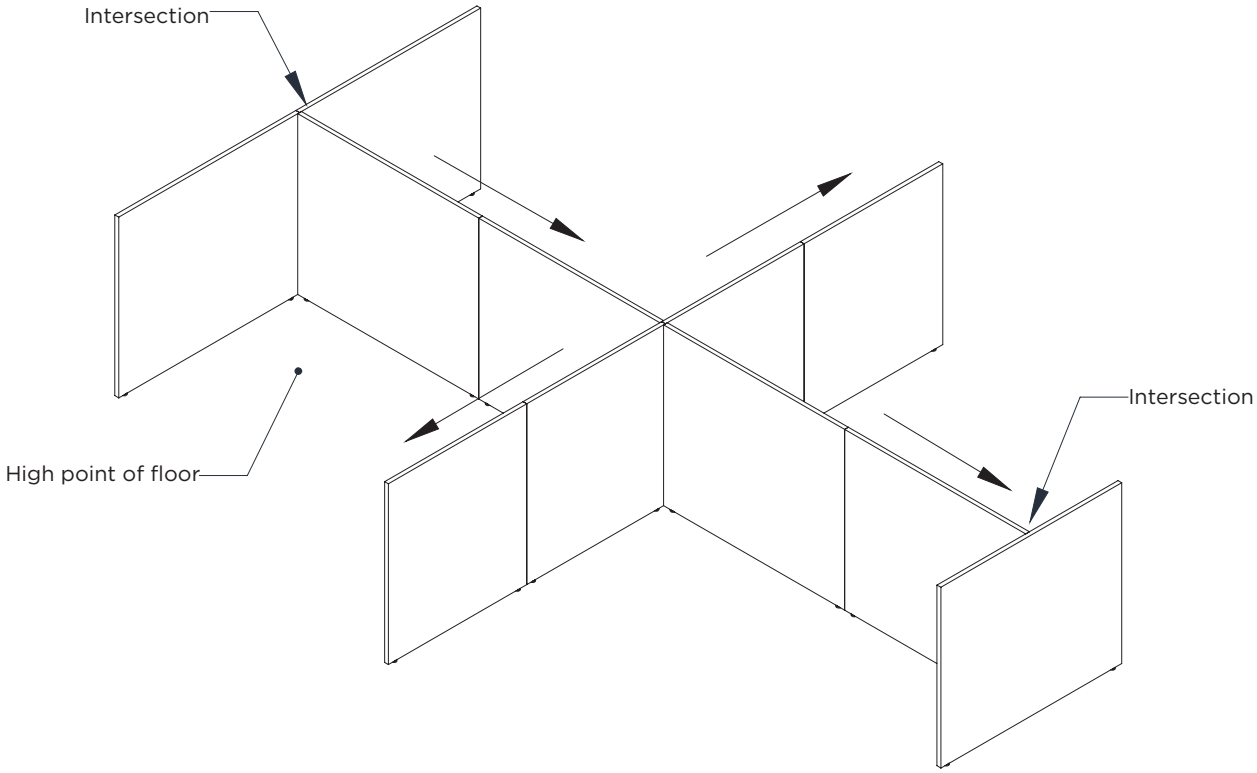

Wall Panels

Starter Post Installation

When installing a starter post, consider the condition of the floor and the wall where the post is mounted.

- Is the floor even and level?
- Are there any high spots on the floor?
- Is the wall plumb?

When correctly installed, the starter post will be plumb and flush to the top and bottom of the first wall panel.

If possible, position wall panels, as shown on the wall panel installation instructions on the proceeding page, to determine where the starter post needs to be located on the wall.

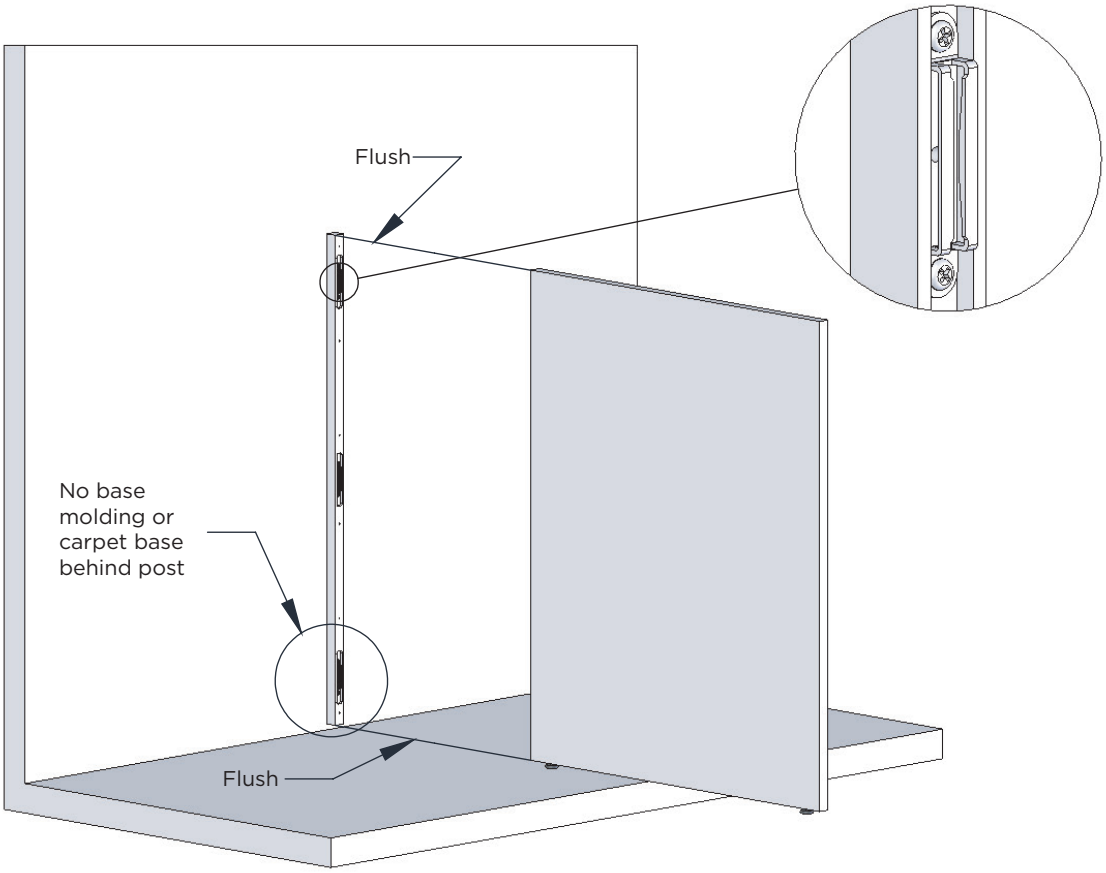

1. Remove or cut away any base molding or carpet base so starter post can be mounted flush to the wall.
2. If needed, scroll cut the starter post so the face that mounts to the panel is plumb.
3. Attach starter post to wall using fasteners that are appropriate for the wall. Mounting holes may require counter-boring so the fastener is not past flush the face of the starter post.
4. Install panel clips in routed pockets.
5. Fasten panel to post.

Wall Panels

120° corner unit installation

The 120° took Kit is item number TOOL-3.

1. Place lower gauge on the floor where the three panels are to meet.
2. Position levelers in the holes of the lower gauge.
3. Place upper gauge on top edge of panels with panels against panel stop.
4. The upper gauge will temporarily hold panels in place until secured by cantilevers and worksurfaces.

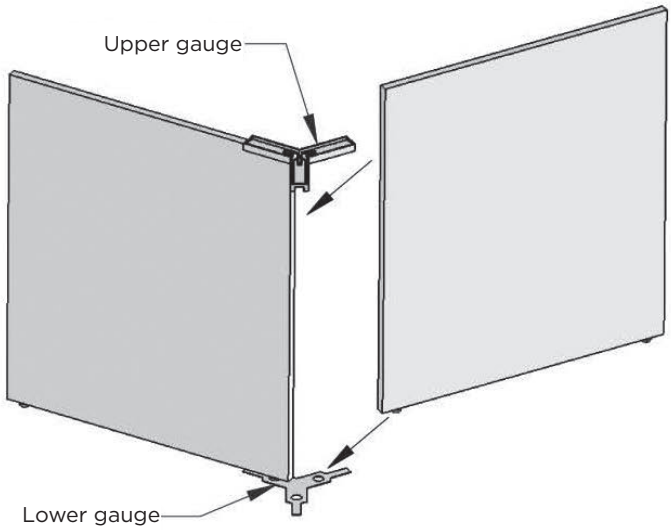

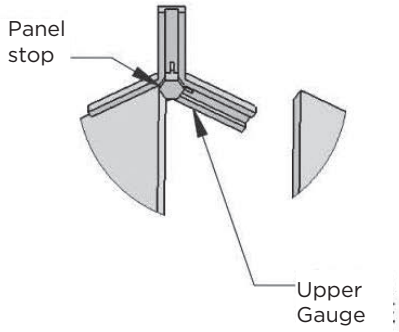

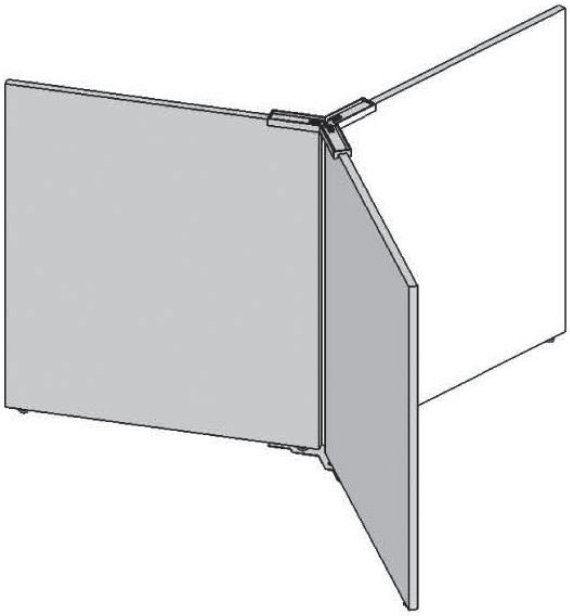

Wall Panels

120° corner unit installation

See bracket plan drawing for locations of cantilever brackets and pedestals placement.

1. Position cantilever brackets as shown on top view diagram (right) unless otherwise specified.
2. Use cantilever gauge to pilot bore two holes at worksurface height.
3. Use two screws in slotted holes on cantilever bracket from HK-81.
4. Make sure top of bracket is 27 3/8″ from bottom edge of panel, adjust if needed.
5. Use two more screws to secure bracket in place from HK-81.
6. Place worksurfaces on cantilever brackets with 11/2″ space between tops and panels.
7. Screw tops to cantilever brackets.
8. Remove upper and lower panel gauges (panel jack may be needed).

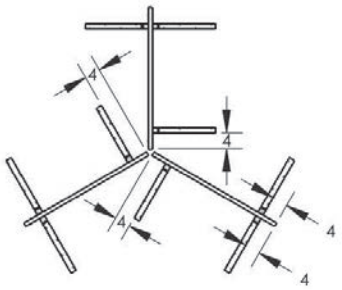

Top view of bracket placement

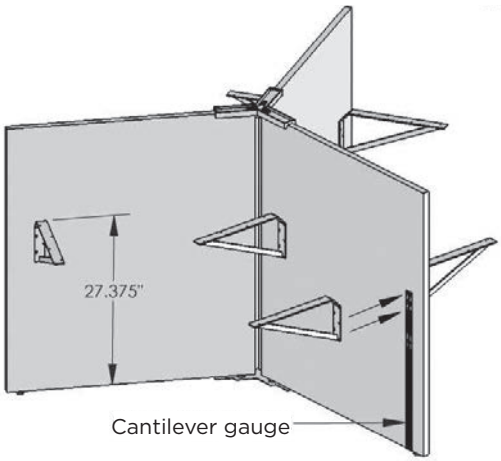

Cantilever gauge

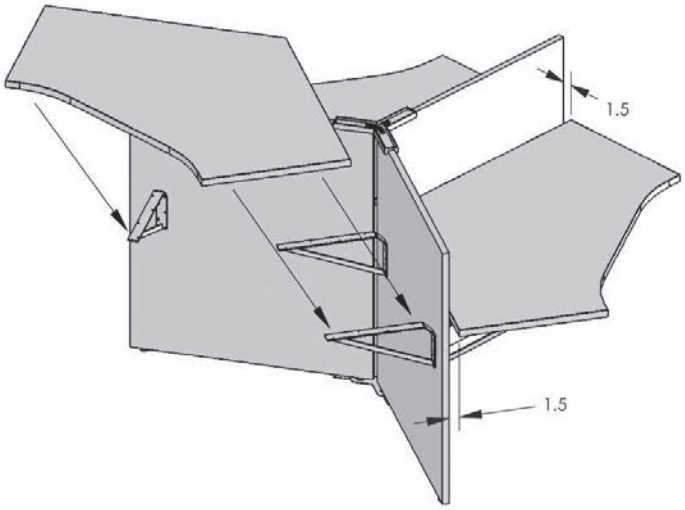

Pedestal Preparation

Drawer removal

Drawers must be removed for pedestal installation.

Drawer Removal

1. Open drawer to full extension.
2. Push drawer release on right hand slide down and at the same time, push drawer release on the left hand slide up.
3. Pull drawer forward until free from slides.
4. Secure pedestal to top using screws.
5. If applicable, secure to wall panel using pedestal bracket.

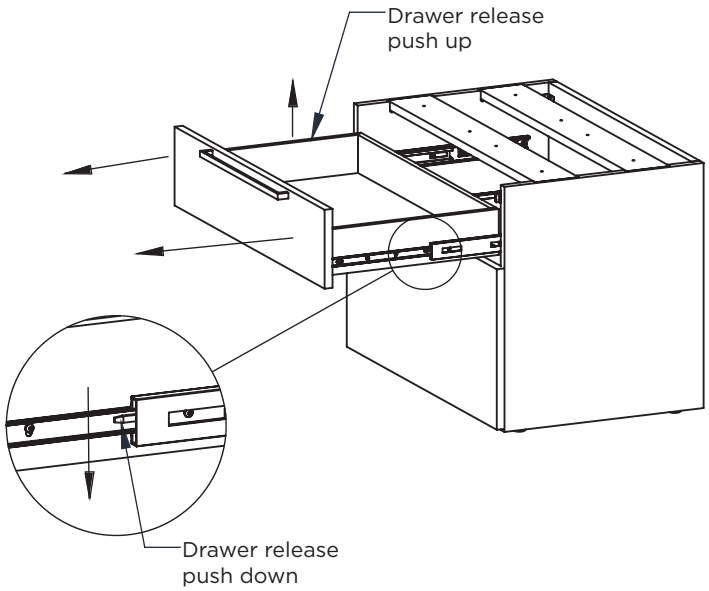

Pedestal Preparation

Shelf removal

Shelf in open shelf pedestals must be removed for access to screw holes for pedestal installation.

1. Remove drawer below shelf.
2. Remove four screws from L-brackets that hold shelf in place.
3. Do not remove screws from end panels.
4. Remove shelf.
5. Replace shelf and secure with screws after installation.

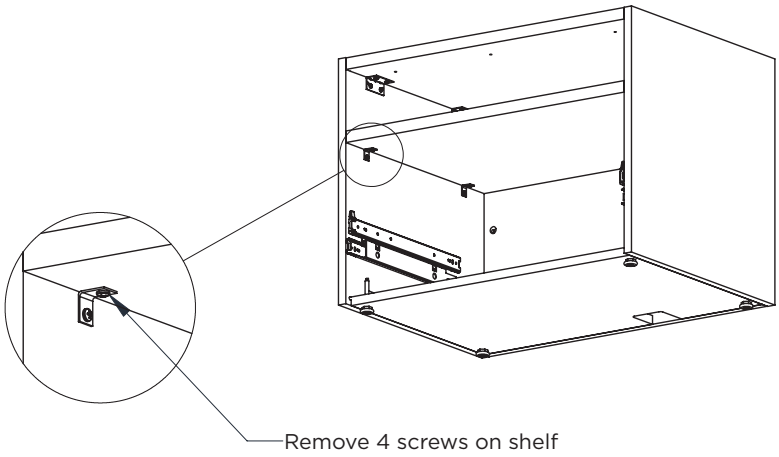

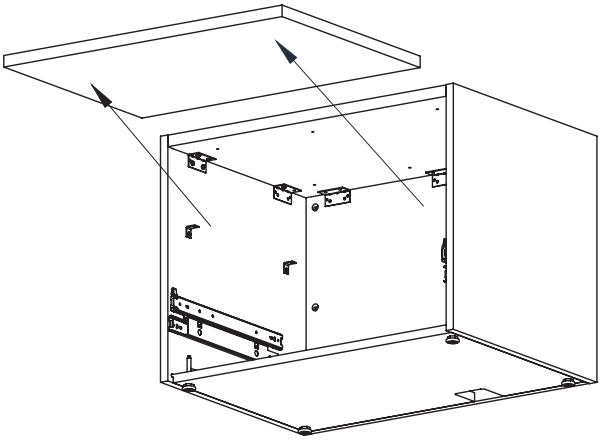

Pedestal Preparation

Riser beam installation.

1. Turn pedestals upside down and place side to side.
2. Pilot bore and screw pedestals together using #8 x 1 1/4″ pan head screws (Hardware Kit HK-110).
3. Place riser beam on pedestal assembly with 4″ spacing on both sides and 2″ spacing on the front.
4. Attach riser beam to pedestal assembly by screwing L-brackets to pedestals using #8 x 5/8″ pan head screws (Hardware Kit HK-9).

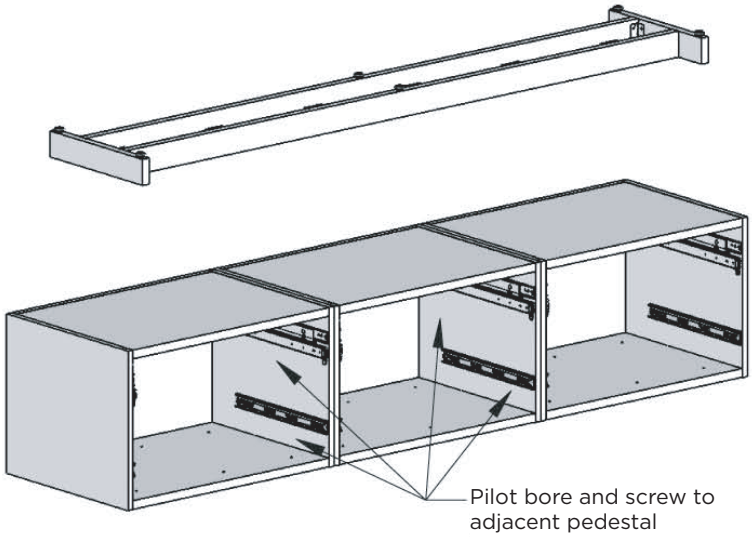

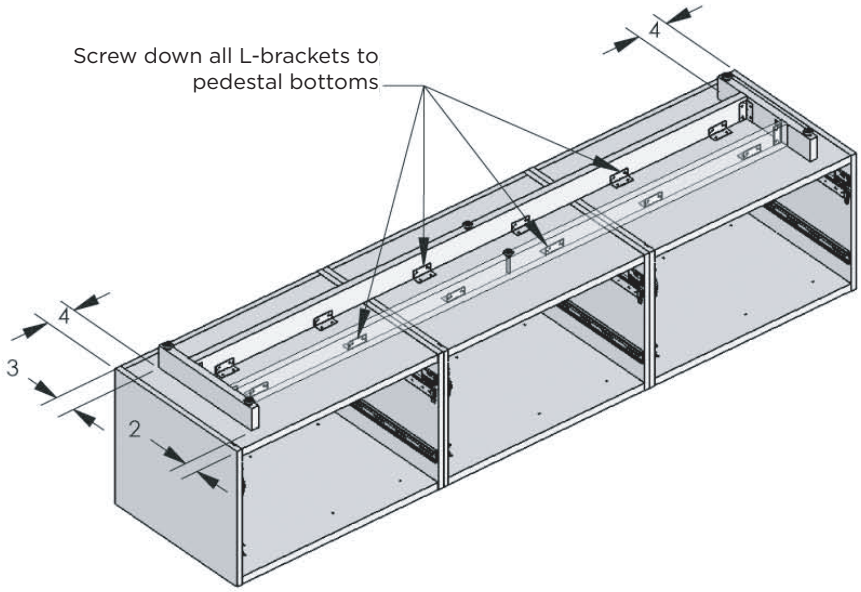

Pedestal Preparation

Pedestal bracket installation

Bracket quantities
1 pair - 16″ wide pedestals
2 pairs - 24″, 30″, & 36″ wide pedestals

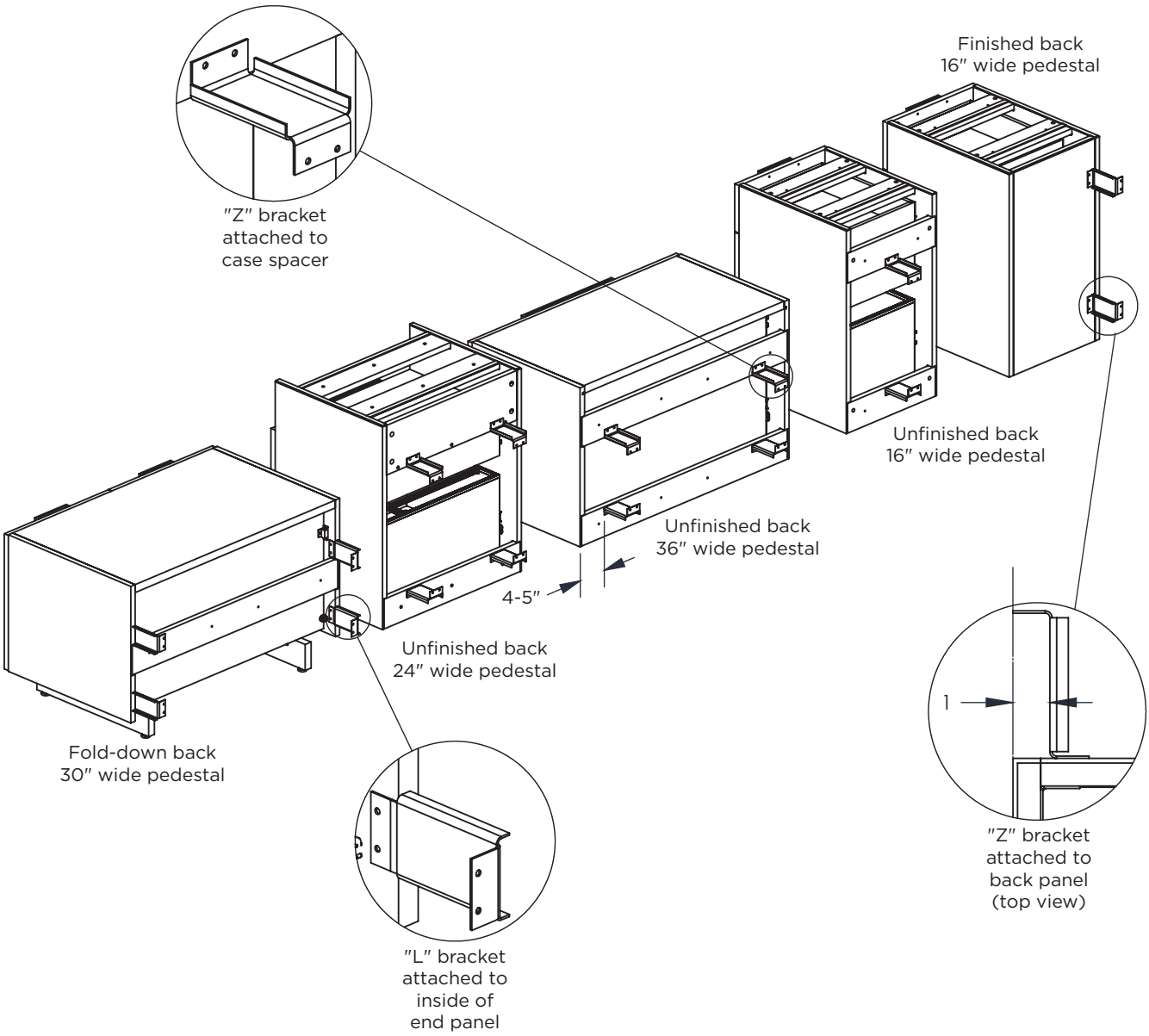

Pedestal Preparation

Pedestal bracket installation

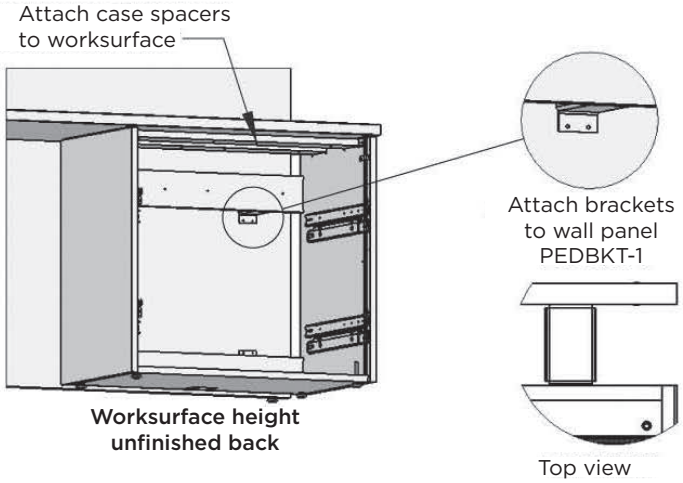

Worksurface height unfinished back

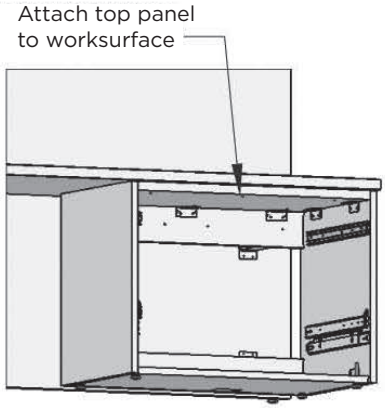

Low height unfinished back

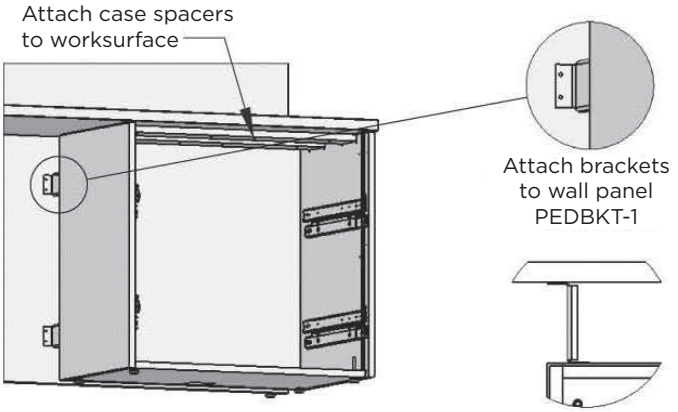

Worksurface height finished back

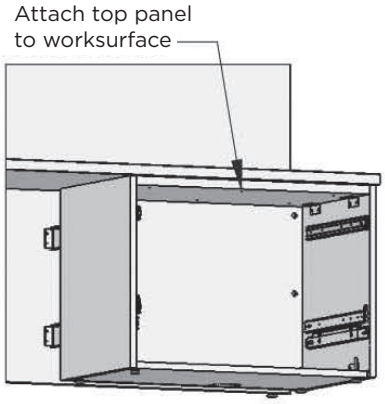

Low height finished back

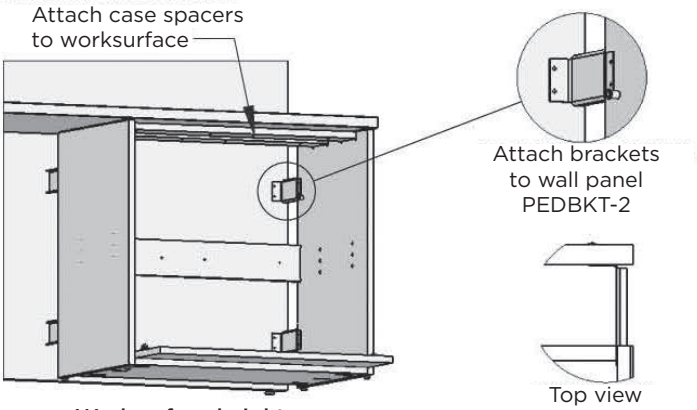

Worksurface height fold-down back

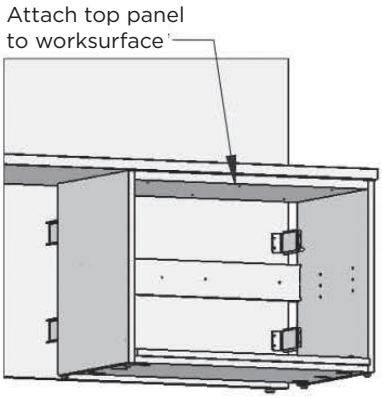

Low height fold-down back

*** use hardware kit HK-15**

Pedestal Preparation
Pedestal attached to end panel

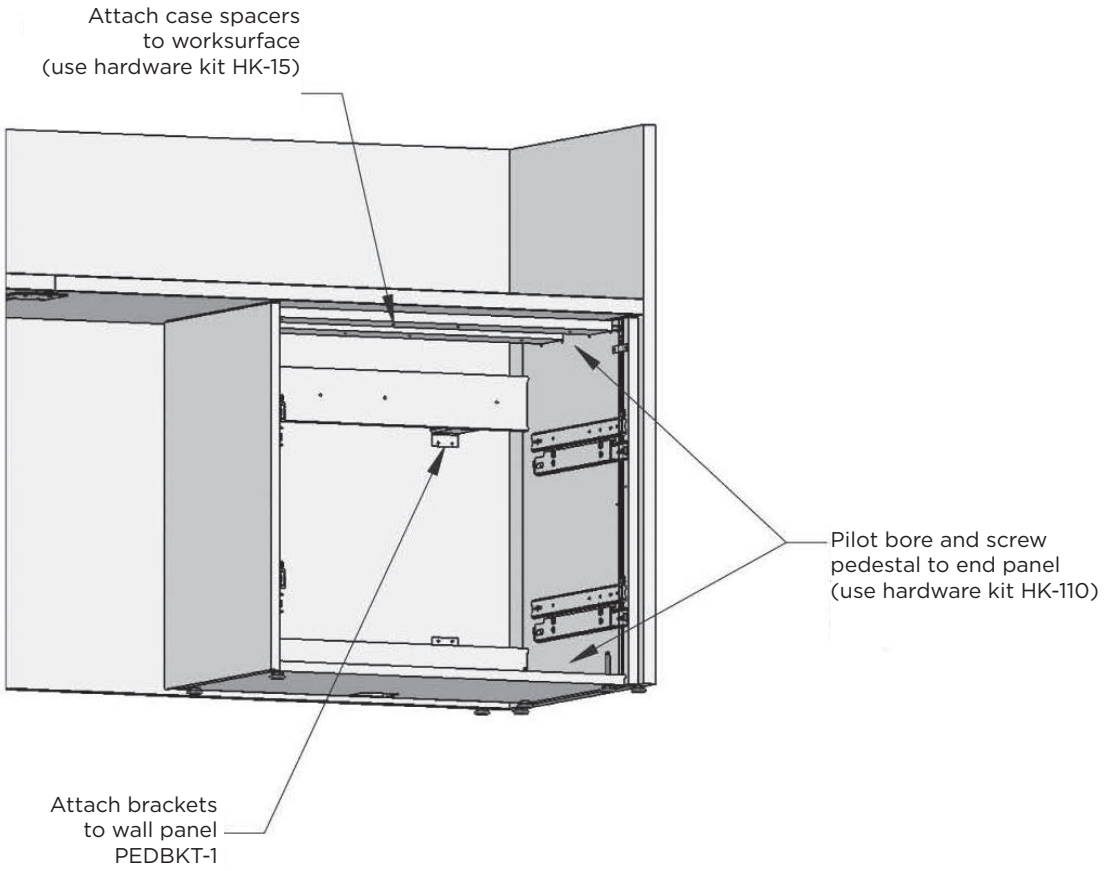

Cantilever Placement

Low height tops

See bracket plan drawing for locations of cantilever brackets and pedestal placement.
Note: Cantilever tool is not required, but does simplify installation.

1. Place pedestals in place- do not attach to panels at this time.
2. Position cantilever brackets as shown on bracket drawing.
3. Use two screws from HK-81 in slotted holes.
4. Make sure top of bracket is 21 ⅜″ from bottom edge of panel, adjust if needed.
5. Use two more screws from HK-81 to secure bracket in place.

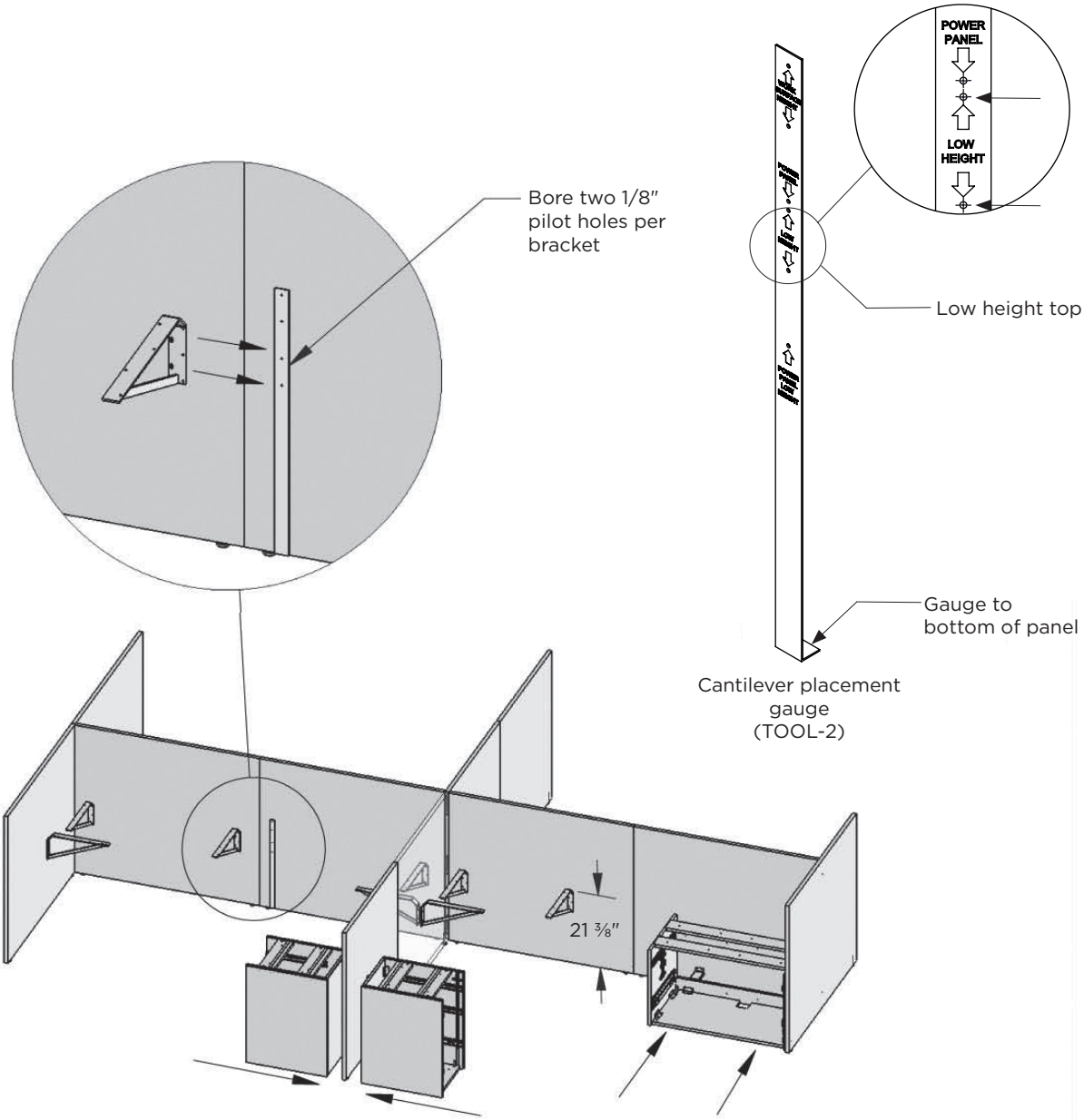

Cantilever Placement

Worksurface height tops

See bracket plan drawing for locations of cantilever brackets and pedestal placement.
Note: Screws ship in box with cantilever.

1. Place pedestals in layout per your installation drawing. **Note**: Do not attach to panels at this time.
2. Position cantilever brackets as shown on bracket drawing.
3. Use two screws from HK-81 in slotted holes.
4. Make sure top of bracket is 27 ⅜″ from bottom edge of panel, adjust if needed.
5. Use two more screws from HK-81 to secure bracket in place.

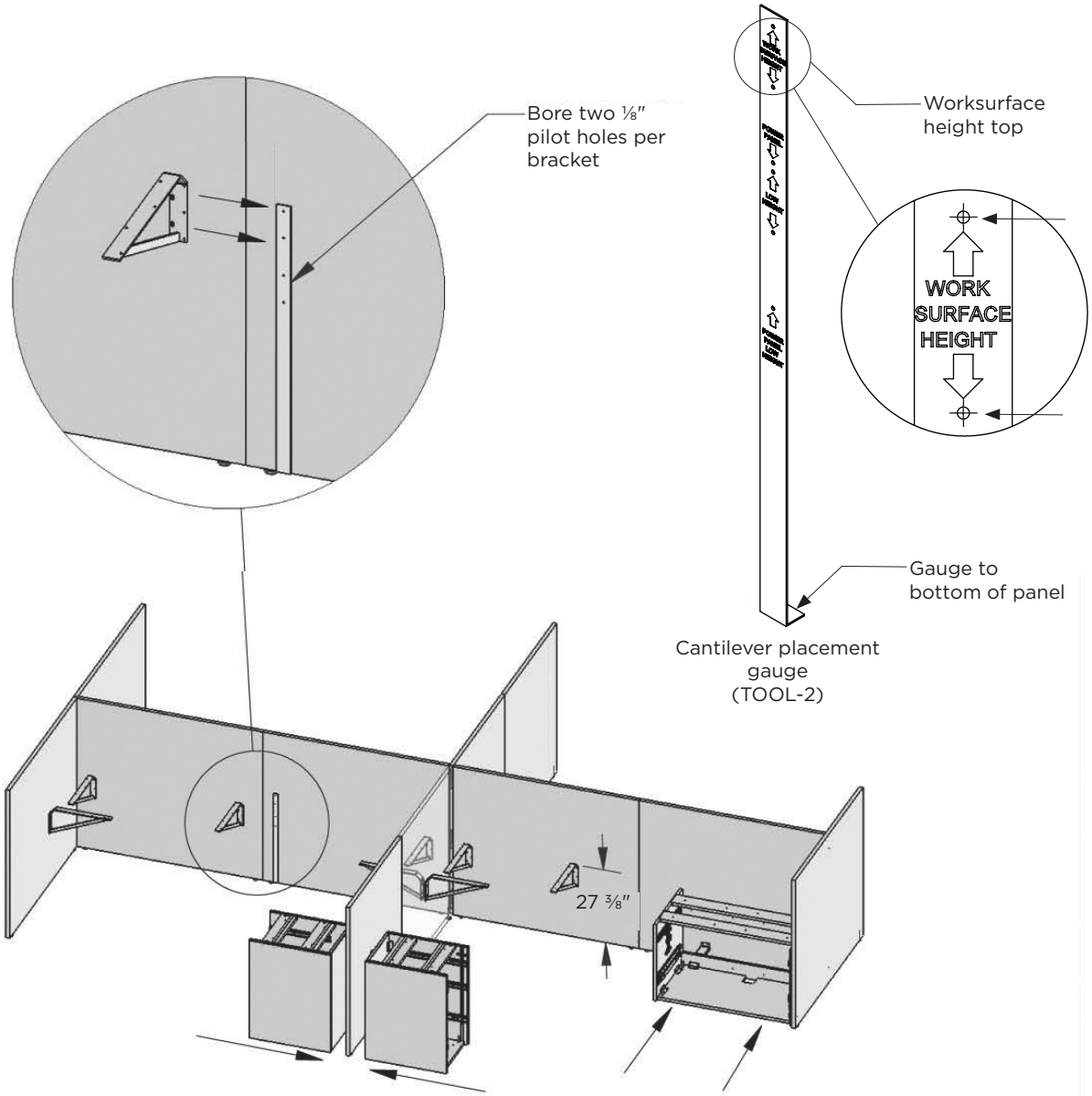

Corner shelf

Mouting heights

- Corner shelf mounting heights vary by application
- **Note**: All heights provided are measured from the bottom of the panel

No power channel

- Corner shelf standard mounting height is 17″ from bottom of the panel.
- When height adjustable leg to wall bracket is specified, brackets should mount to wall panel below the corner shelf.

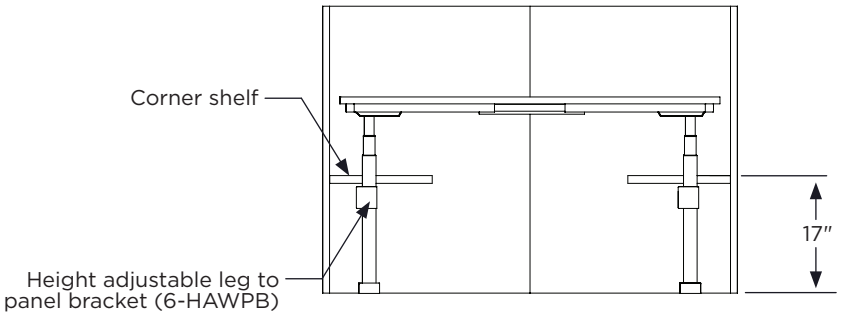

With power channel

- Desk height power channel (with or without 6-HAWPB) (**Figure A**)
  - Install corner shelf 13 ½″ from bottom of wall panel.
  - **Note**: When height adjustable leg to panel bracket (6-HAWPB) is specified, attach to wall panel below the corner shelf.

- Low height power channel (with 6-HAWPB) (**Figure B**)
  - Install corner shelf 18 ½″ from bottom of wall panel.
  - **Note**: Attach height adjustable leg to panel bracket (6-HAWPB) to wall panel below the corner shelf.

- Low height power channel (no 6-HAWPB) (**Figure C**)
  - Install corner shelf 17″ from bottom of panel.

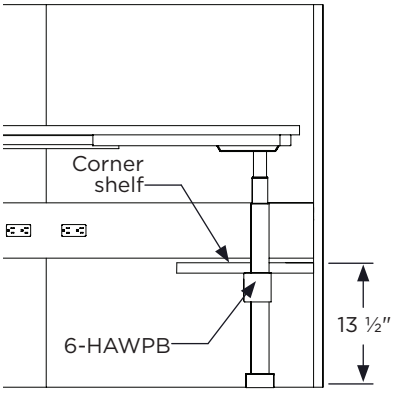

Figure A

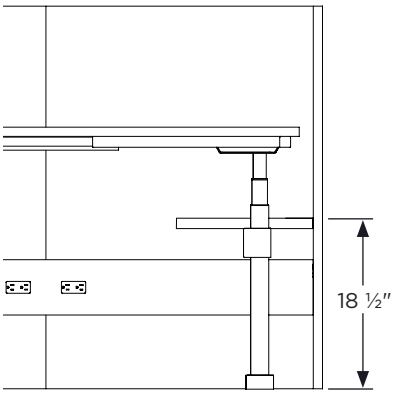

Figure B

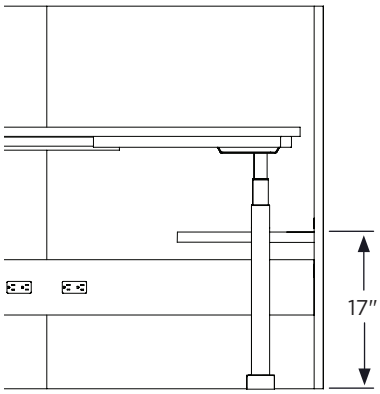

Figure C

Electrical Installation

Power channel - wall panel prep

General notes

If power is planned to “jump”, or “daisy chain” from one workstation to the next, then it is required that specific pass through holes and/or cutouts are cut into the wall panels. It is important to understand the routed path that the power jumpers have been specified to as this will determine the cutout process.

Refer to following pages for pass through cutout locations for the below applications:

- Passing jumper through a divider panel
- Using an H-block
- Passing jumper through spine panel

Note: When panel corner support shelves are specified with a power channel, corner shelf mounting heights vary by application. Refer to corner support mounting height section for assembly heights.

Passing jumper through divider panel

- For passing a single jumper through a divider panel, a 2 ⅜” (60mm) diameter hole saw bit can be used.
- **Note**: The hole must be cut prior to divider panel installation. Refer to the drawing views for specific placement onto the faces of the panels. Center of pass through notch will be placed ½″ from panel edge (**Figure A/Elevation A**).

When panel cutouts are prepped, continue to hangman bracket assembly

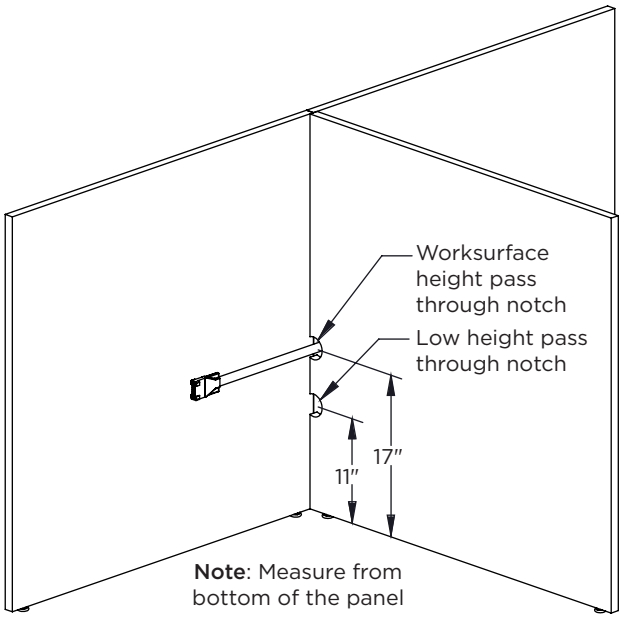

Figure A

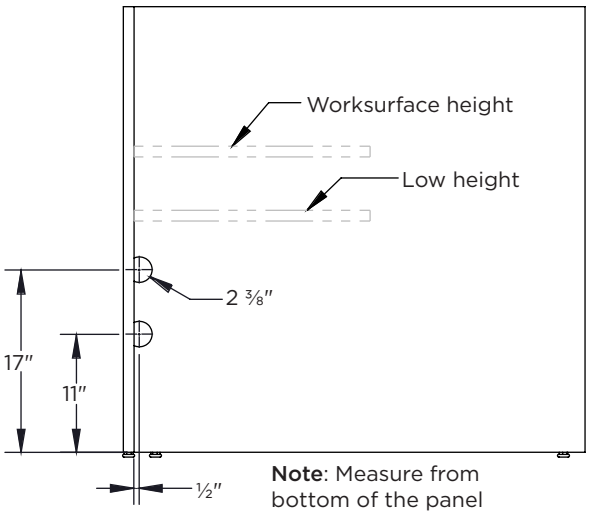

Elevation A

Electrical Installation

Power channel - wall panel prep

Using an H-block

- In the event that power is being branched out in different directions and the use of a H-Block is being utilized, then a rectangular cutout must be cut into the panel. This can be cut after all the primary wall panels have been assembled (**Figure A/Elevation A**).
- The elevation dimensions of this cutout are shown on the illustration, but the lateral location of the cutout will need to be determined based on each specific layout (**Figure B/Elevation B**).

When panel cutouts are prepped, continue to hangman bracket assembly

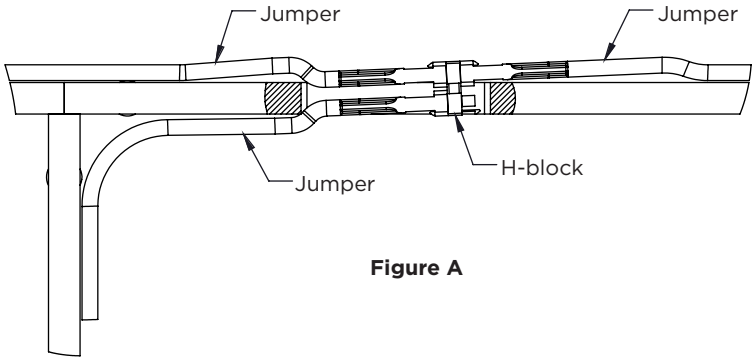

Figure A

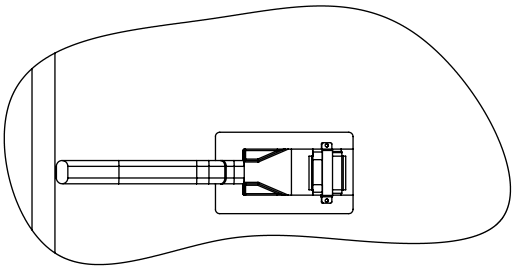

Elevation A

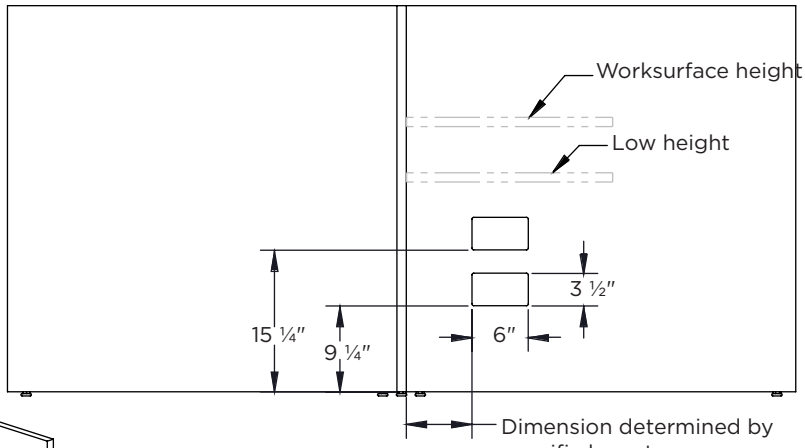

Elevation B

Note: Measure from bottom of the panel

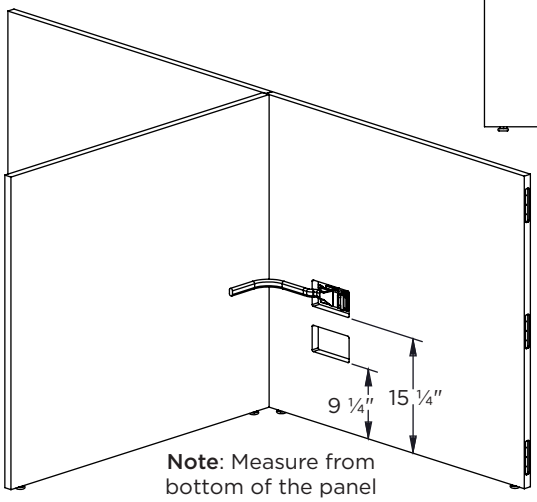

Note: Measure from bottom of the panel

Figure B

Electrical Installation

Power channel - wall panel prep

Passing jumper through spine panel

- If power is being crossed over to the opposing side of the spine wall, then a 2 ⅜" (60mm) diameter hole saw bit can be used. The elevation dimensions of this hole are shown on the illustration, but the lateral location of the hole will need to be determined based on each specific layout. (**Figure A/Elevation A)**

When panel cutouts are prepped, continue to hangman bracket assembly

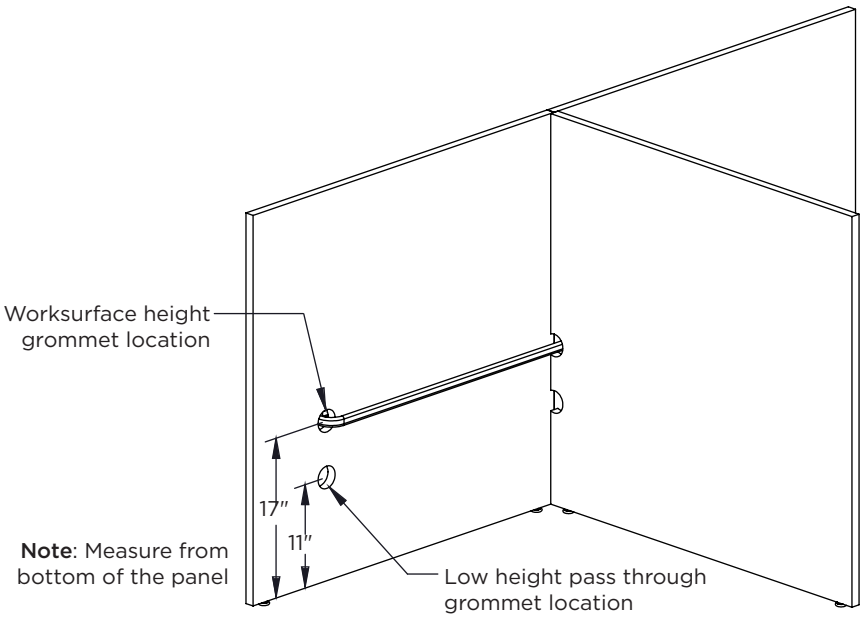

Figure A

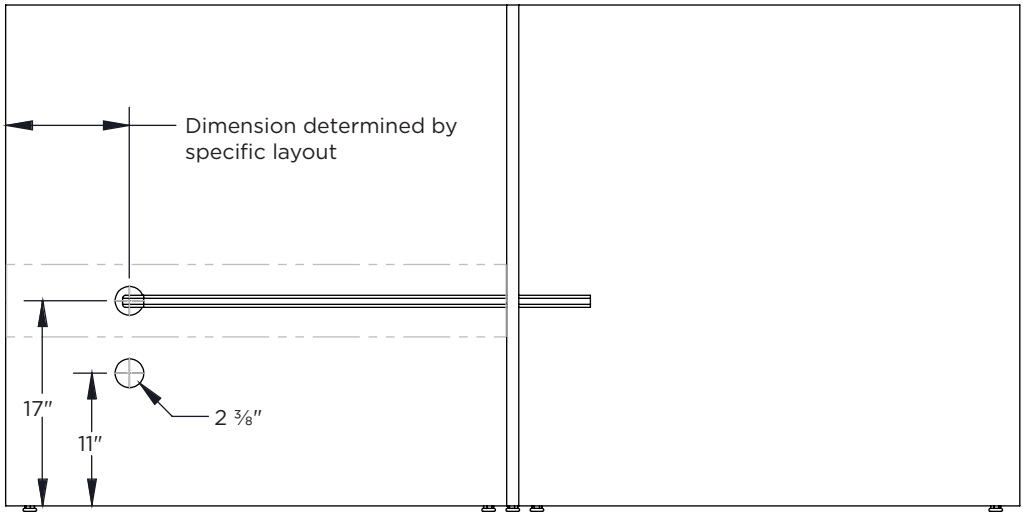

Note: Measure from bottom of the panel

Elevation A

Electrical Installation

Power channel - wall panel prep

Hangman bracket assembly

- Once all panel cutouts are placed, the hangman brackets can now be installed onto the wall panels.
- **Note**: It is recommended that these be installed prior to any worksurfaces.
- Utlize TOOL-2 to locate the brackets (**Figure A**). Refer to power panel hole markings (**TOOL-2 detail**). Utlize upper panel panel hole for desk height mounting, and power panel low height opening for low height mounting.
- These hole heights can also be located using the dimensions shown in the drawing views (**Figure B**).

Continue to next page.

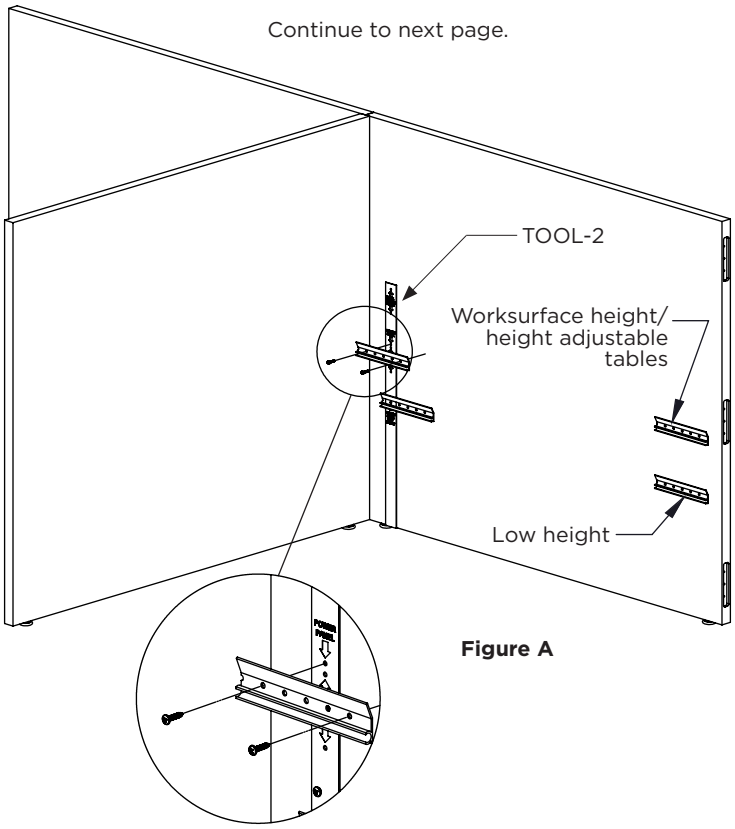

Figure A

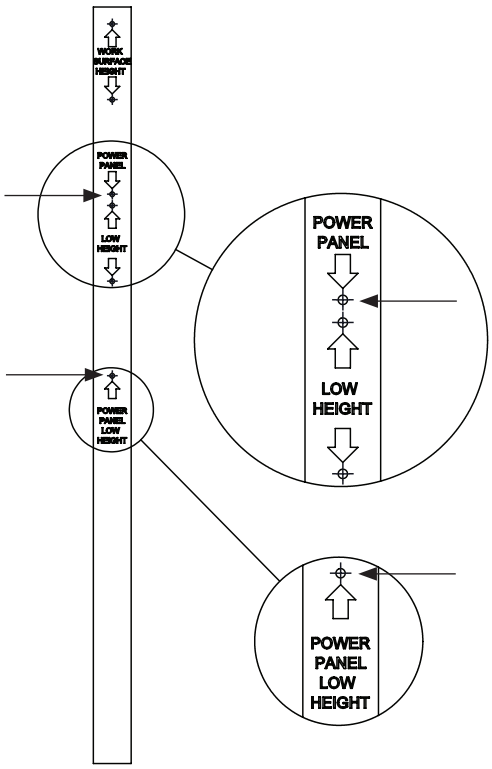

TOOL-2 detail

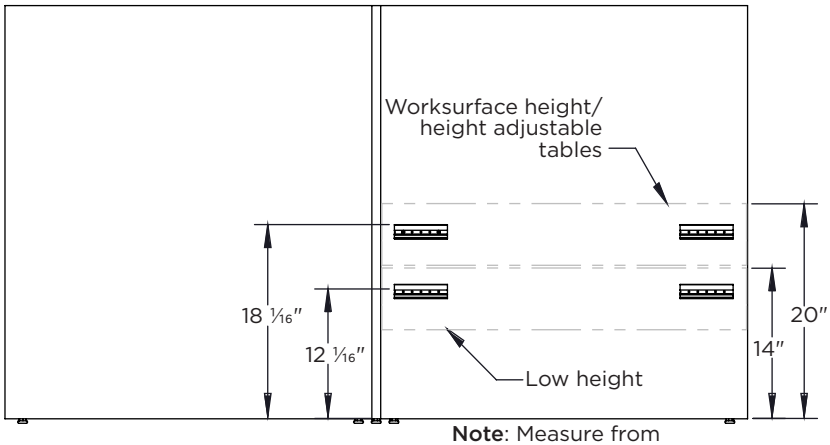

Figure B

Note: Measure from bottom of the panel

Electrical Installation

Power channel - wall panel prep

Hangman bracket assembly, continued

- Depending on the length of the power channel, the bracket quantity will vary from one to three pieces. Refer to the drawing illustration for detailed bracket location information (**Figure A**).
- **Note**: To reduce installation time as well as potential misalignment between channels, a hangman bracket can be placed over the seam of the wall panels and shared between power channels (**Figure C**).
- Once the locations have been determined, fasten the hangman brackets to the wall panels using the supplied #8 x ¾" screws into the smaller diameter mount holes.

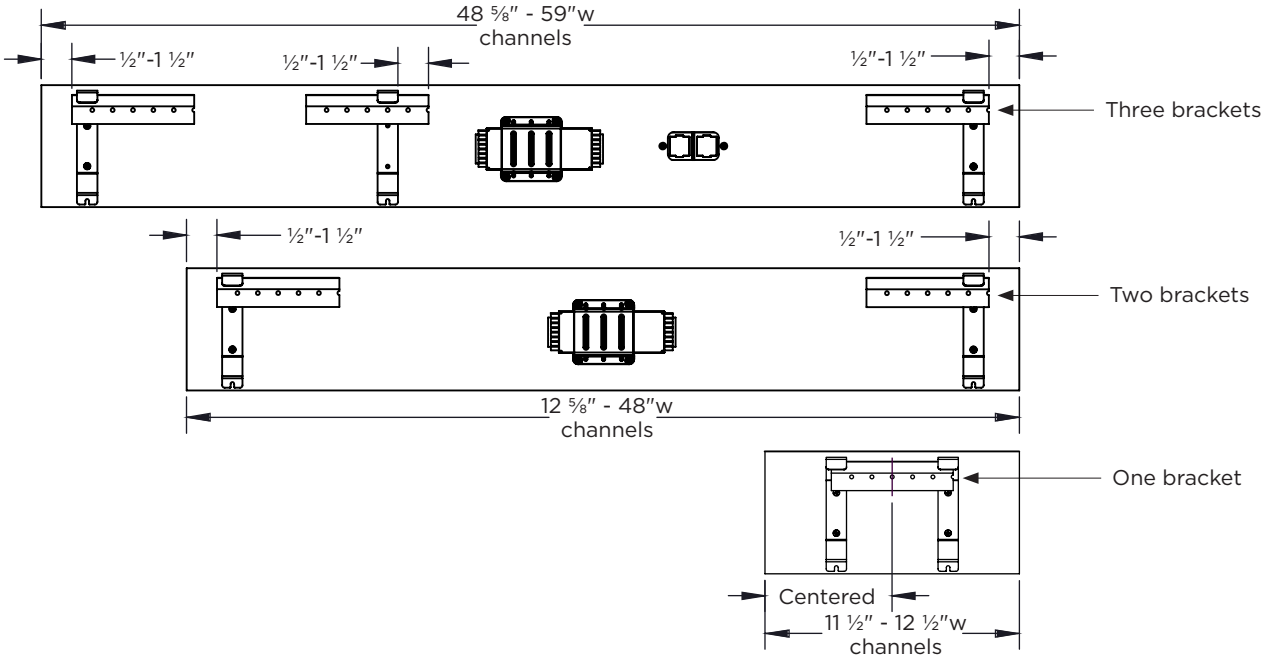

Figure A

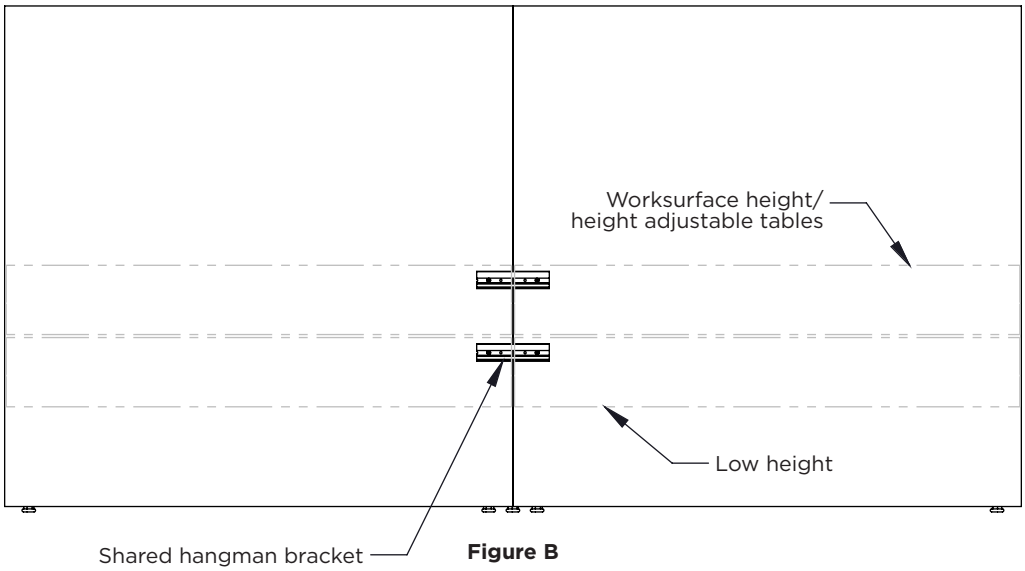

Figure B

Electrical Installation

Power channel - power channel prep

Note: Field assembly is required for power channel hanging clips. Power and data faceplate's, and optional brush strip. If brush strip is specified, the track for it will be factory installed on the power channel.

1. Begin preparing the power channel for installation by fastening the hanging clips onto the back side of the channel (**Figure A**). The channel will be pre-drilled for the clips and depending on the length of the channel, 2 to 3 clips will be included. Fasten the clips to the channel using the supplied #8 x ¾" pan head screws.

Note: Orientation of the clips is a factor if the brush strip option was chosen, or if the data option was included with power.

2. Next, the decorative faceplate(s) can be installed. Insert the applicable power and data faceplate's into their respective cutouts, aligning the mounting bosses to the holes in the channel. Fasten the faceplate's using the supplied #8 x ¾" flat head screws (**Figure B**).

3. If the brush strip option was chosen, then the channel will have the brush strip holder fastened to the channel, but the brush strip will ship detached. To install this, slide the molded plastic end of the strip into the open end of the brush strip holder. Continue sliding until the strip is flush on both ends (**Figure C/Elevation C**).

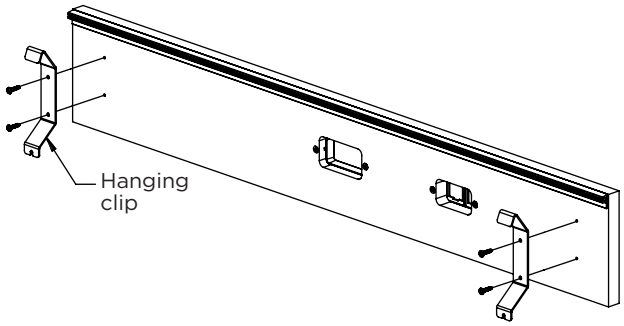

Figure A

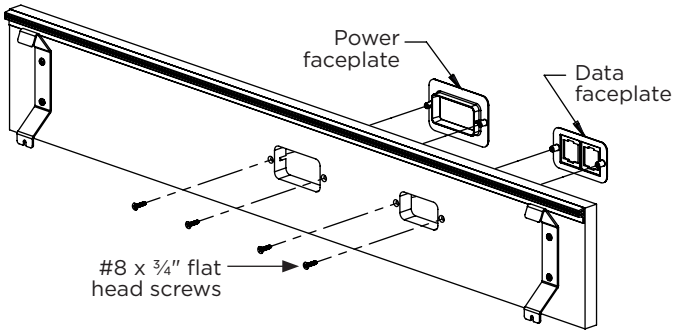

Figure B

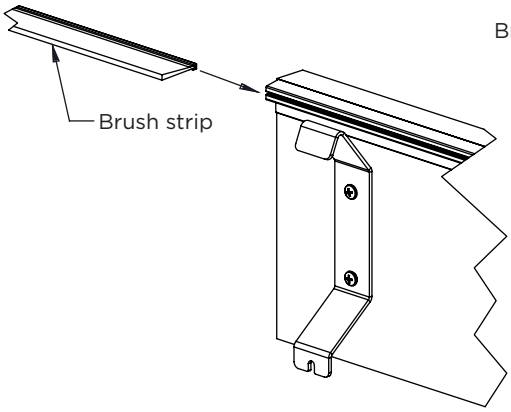

Figure C

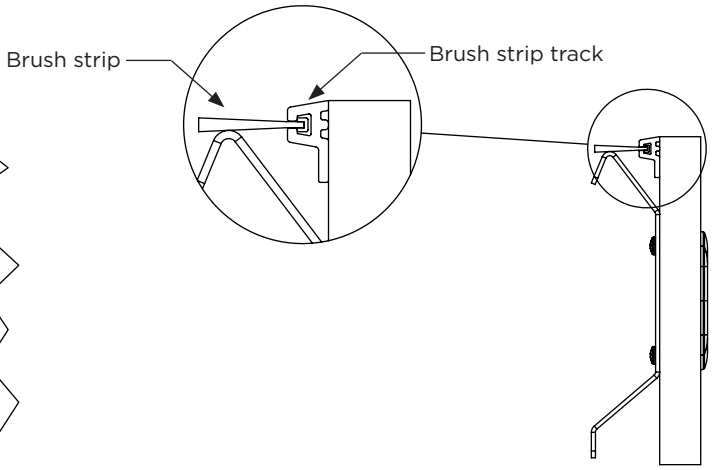

Elevation C

Electrical Installation

Power channel - power component prep

Once spine wall panel and power channels are prepped, the electrical components can now be installed onto the channels so that they are ready to place onto the wall panels.

1. Begin by connecting the duplex receptacle to the power block module. The receptacle is keyed and can only be installed in one direction. Place the receptacle into the power block and slide over until an audible click is heard which verifies that it is locked in place (**Figure A**).

Note: Before beginning this next step, ensure that the correct receptacle circuit number is being utilized (I, II, III, or IV).

Note: The orientation of the power block is crucial in this step. The power block MUST be oriented such that the rounded key is facing upwards and the flat sided key is facing downwards, as shown in the drawing illustrations. This will ensure jumper lengths remain correct and the receptacle lettering is right side up (**Detail B**).

2. Place the power block assembly onto the back side of the power channel making sure the receptacle is inserted into the cutout. Slip the mounting strap over the power block and secure into place using the supplied #8 x ¾" pan head screws.

3. For Chicago Electrical Code applications, begin by fastening the junction box to the mounting bracket using the supplied #10-24 x ⅜" button head screws, as shown in the drawing illustration. Slide the junction box assembly inside the cutout and then secure in place using the #8 x ¾" pan head screws. NOTE: The junction box is symmetrical, so orientation is not a factor.

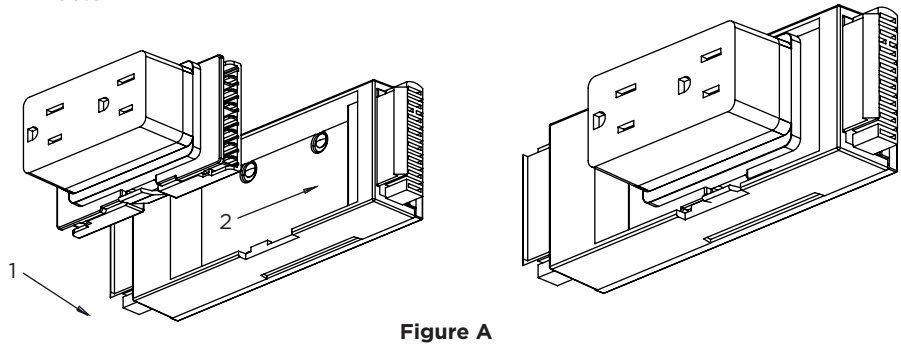

Figure A

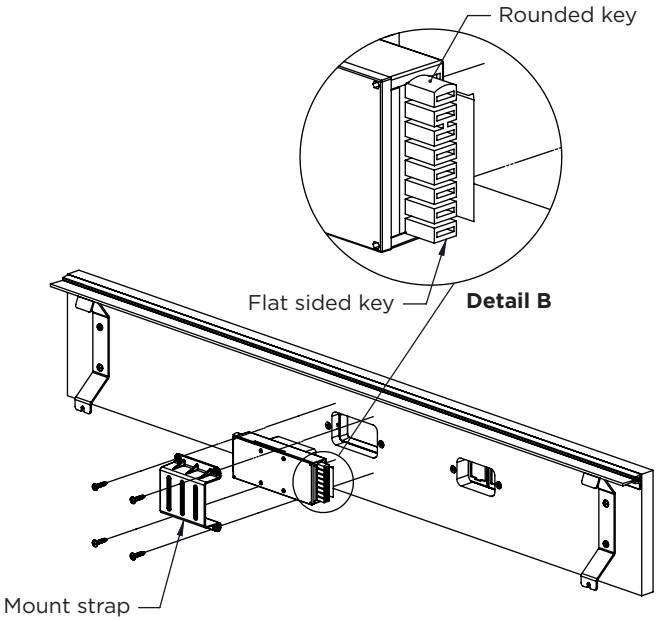

Figure B

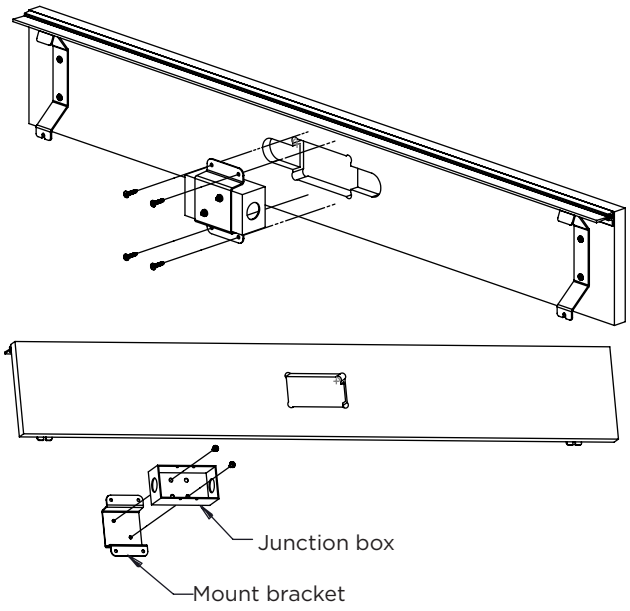

Figure C

Electrical Installation

Power channel - power assembly

End cap

The end cap is intended to be used on the end of a run where the power channel will be exposed and the cavity behind it needs to be concealed.

1. To attach the end cap, align the top and bottom edges with the edges of the channel. Flush the edge of the channel with the primary face of the cap, or, if applicable, push the cap directly up against the brush strip.
2. Secure in place by fastening the #8 x ¾" screws through the mount holes and into the channel (**Figure A**)

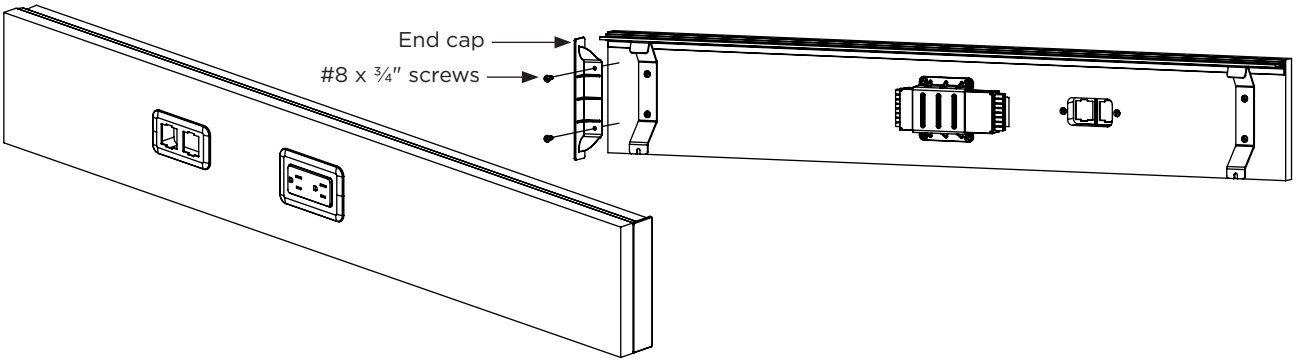

Corner cap

The corner cap is intended to be used to turn an interior corner between two power channels.

1. To attach the corner cap, first slide one of the power channels away so adequate space can be made to fasten the cap to the wall panel.
2. Place the cap in the corner of the wall panel, making sure all 4 mounting tabs are touching the faces of the channels. Position the cap vertically so that the top of the power channel and cap are flush.
3. Fasten the two #8 x ¾" flat head screws through the mounting tabs and into the wall panel. Slide the power channel up against the cap, then repeat the process for the remaining 2 mounting tabs.

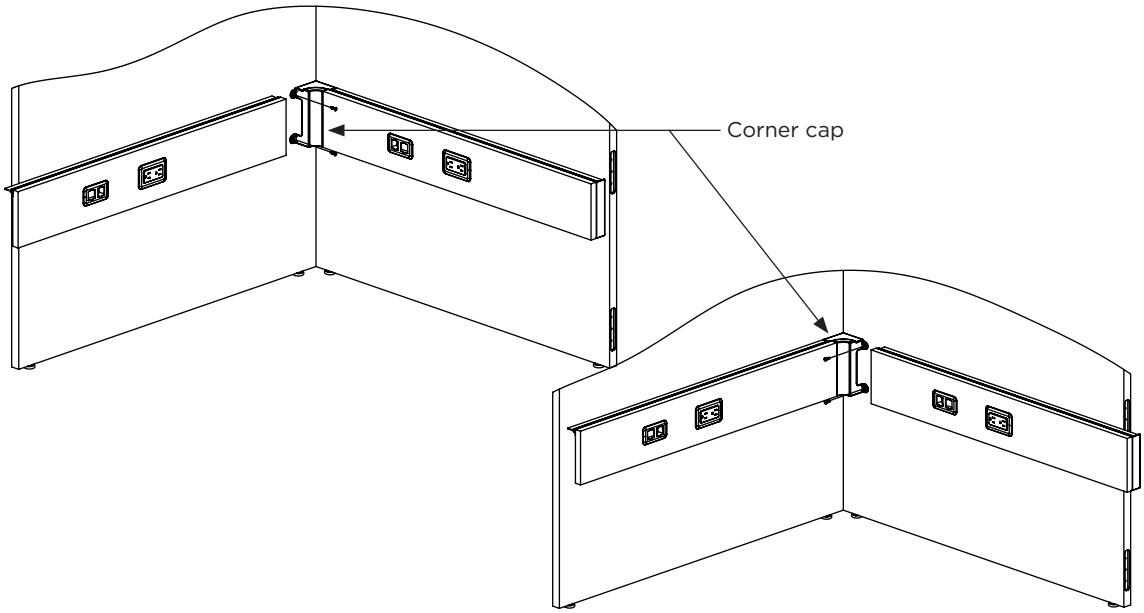

Electrical Installation

Power channel - power assembly

Connecting jumpers

It is suggested to connect the jumpers in a continuous line rather than randomly making connections around the set up. The starting point for this could begin at the location of the power infeed, or at the very end of the run and working towards the infeed location.

1. Connect the jumper to the power block by angling the connector towards the locking tab on the power block. Once the locking tab engages and begins to slip inside the connector, firmly slide the jumper towards the power block until it has fully seated and an audible click can be heard verifying the locking tab has secured the jumper in place.

Note: The jumper connection can be difficult to get started due to limited space. However, with a careful eye on the end of the jumper and the locking tab, give the jumper end some twisting and bending motions and it will ease the process. The connection process will get easier with more attempts. Hang the channel onto the hangman brackets and then continue making the connection to the next channel in line. Do not worry about final placement at this time as it will be completed in the next step.

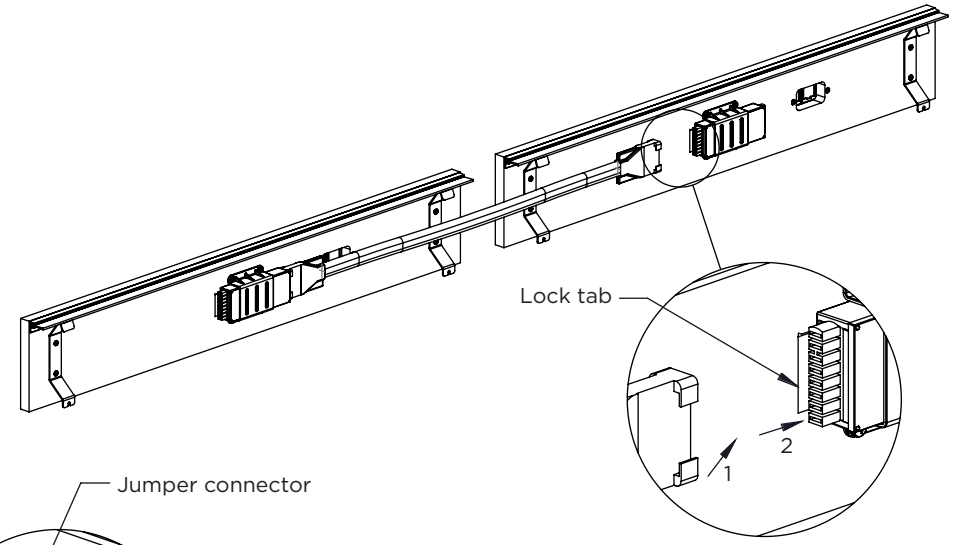

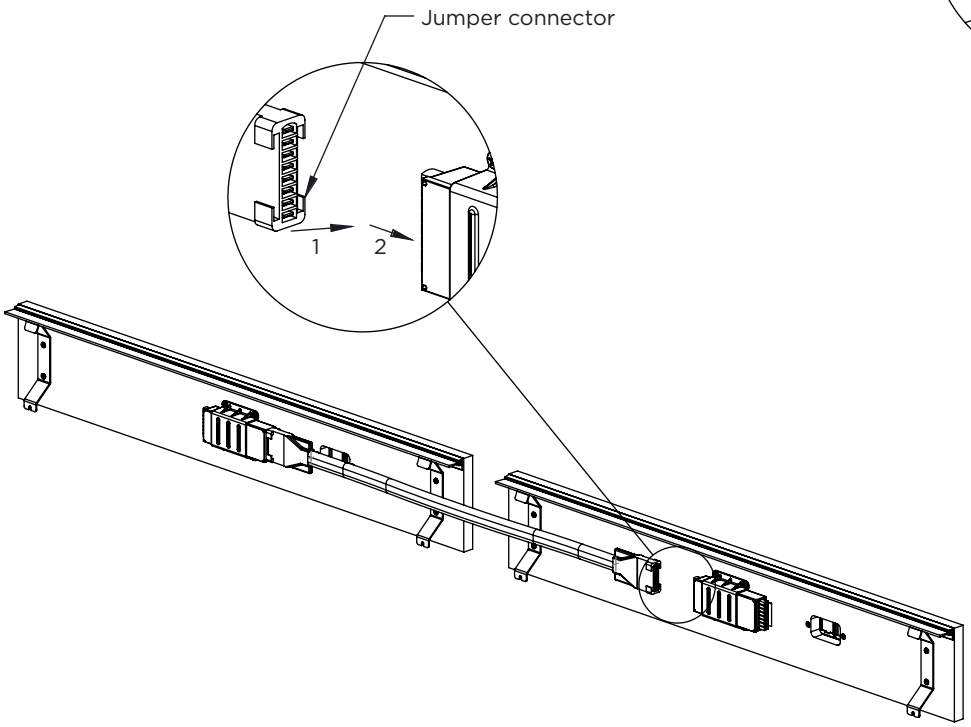

Electrical Installation

Power channel - power assembly

Securing power channel

1. Once the channel has been hung onto the hangman brackets, it can be secured into place by screwing the #8 x ¾" screws into the open slot on the bottom of the hanging clips as shown in the illustration.

Note: It is recommended to hold the channel in place while driving the screw in to prevent the channel from pushing upwards.

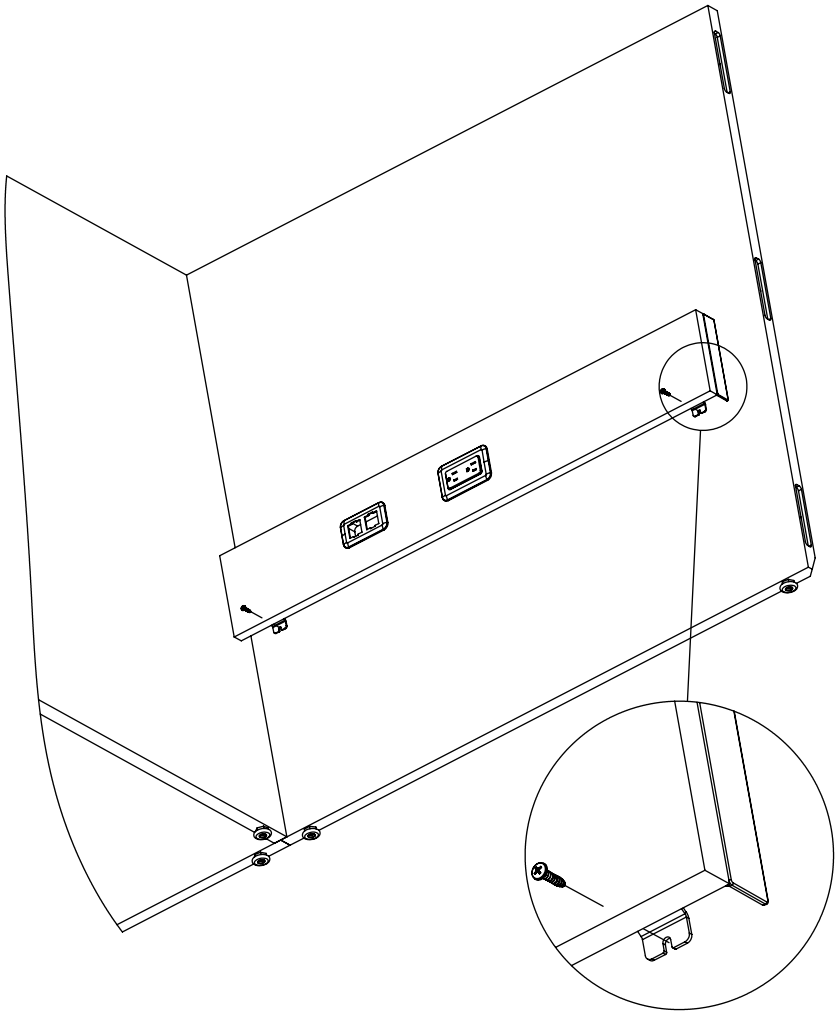

Electrical Installation

Power channel - power assembly

Infeed manager attachment

1. The 6-PPAN-SWM is intended to be used anywhere along the power channel run that requires wire management on the face of a wall panel.
2. The 6-PPAN-CWM is intended to be used only on the interior corner when 2 power channels are being utilized along with the corner cap.
3. To install either the 6-PPAN-SWM or 6-PPAN-CWM, first determine if the length of the manager needs to be trimmed. If the power channels were installed at the “low height” position, or any position lower than “worksurface height”, then the manager will need to be cut to length using a utility knife. Next, peel the protective wrappers on the back side to expose the adhesive. Place the manager onto the face(s) of the wall channel and press firmly to ensure proper adhesion.

Note: Both infeed managers can be trimmed in the field as needed

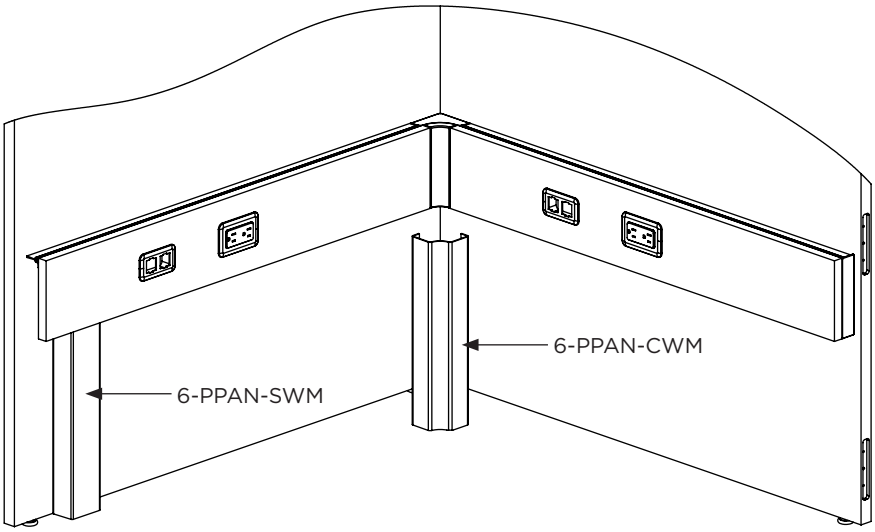

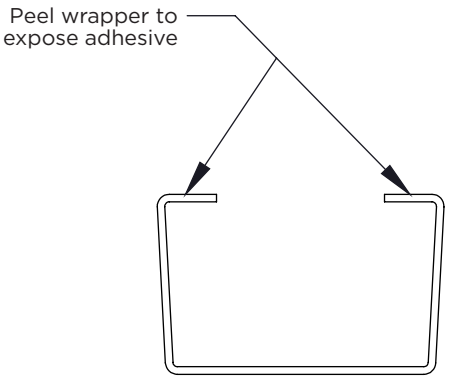

6-PPAN-SWM

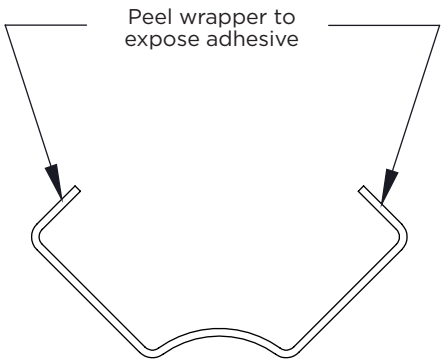

6-PPAN-CWM

Electrical Installation

Power channel - data assembly

The WM3-4 is a universal wire management channel that can be placed in any desirable location. A suggested area would be behind the power channel, slightly above the bottom edge of the power channel as shown in the illustration.

1. Peel the protective wrapper on the back side of the channel and place onto the wall channel.
2. Press firmly to ensure proper adhesion.

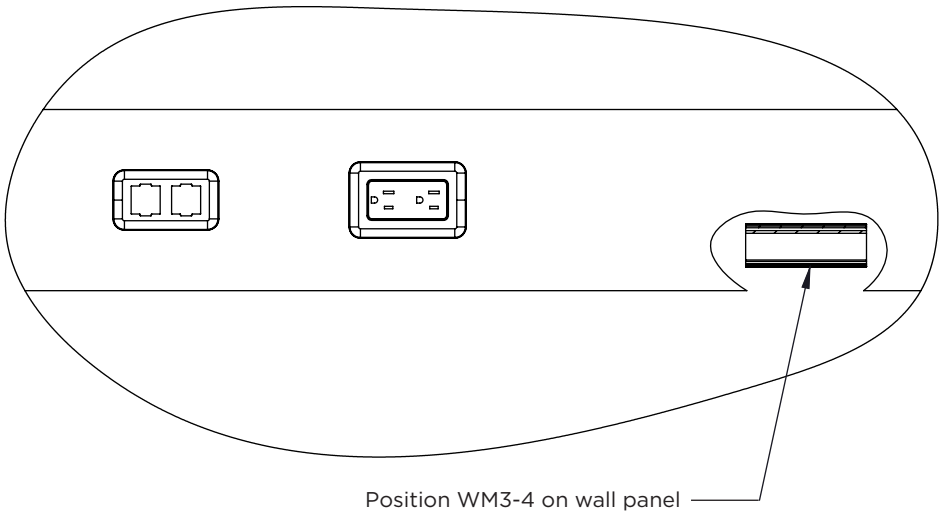

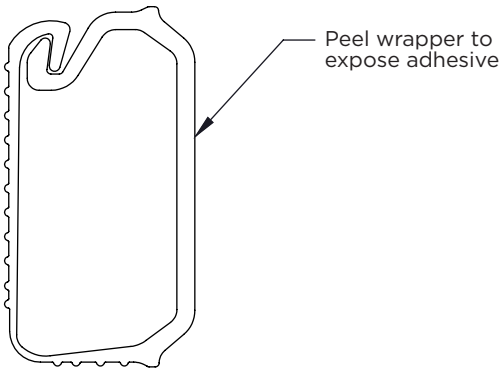

Electrical Installation

8 wire electrical installation

Refer to electrical plan drawing for:

- Electrical components needed
- Locations of electrical components
- Grommet hole locations

1. Refer to electrical plan drawing to determine grommet locations.
2. Drill 2 3/8″ diameter holes through panels where indicated.
3. Install grommets in panels.
4. Power infeed must be installed by licensed electrician.

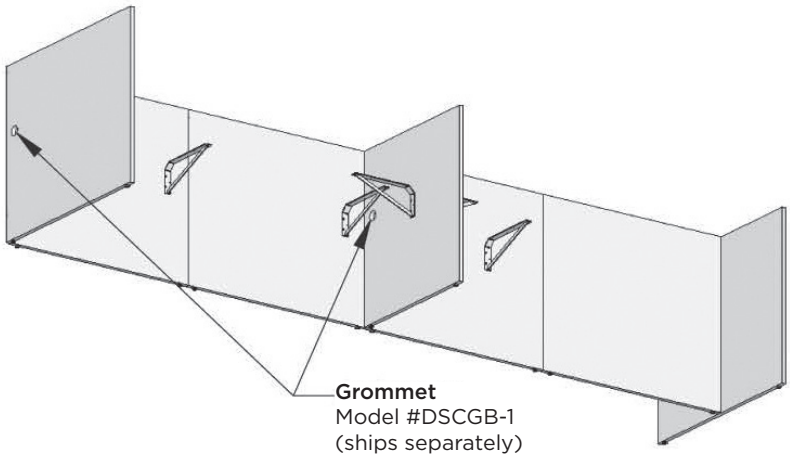

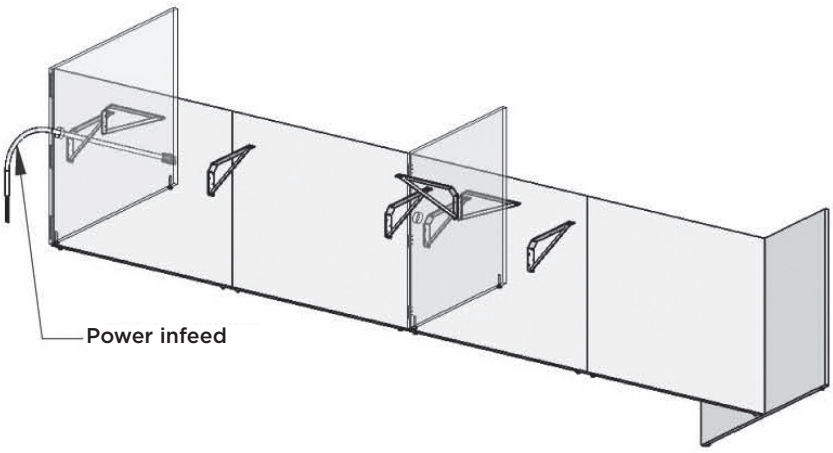

Electrical Installation

8 wire electrical installation

5. Install in wall or floor outlet. Refer to electrical plan drawing to determine components needed and locations for components.
6. Route jumpers through cable management holes in cantilever brackets and through grommet holes in panels.
7. Snap blocks and jumpers together to create chain according to electrical plan drawing.
8. Attach power infeed to chain.
9. Leave chain in place until worksurfaces and pedestals have been installed.

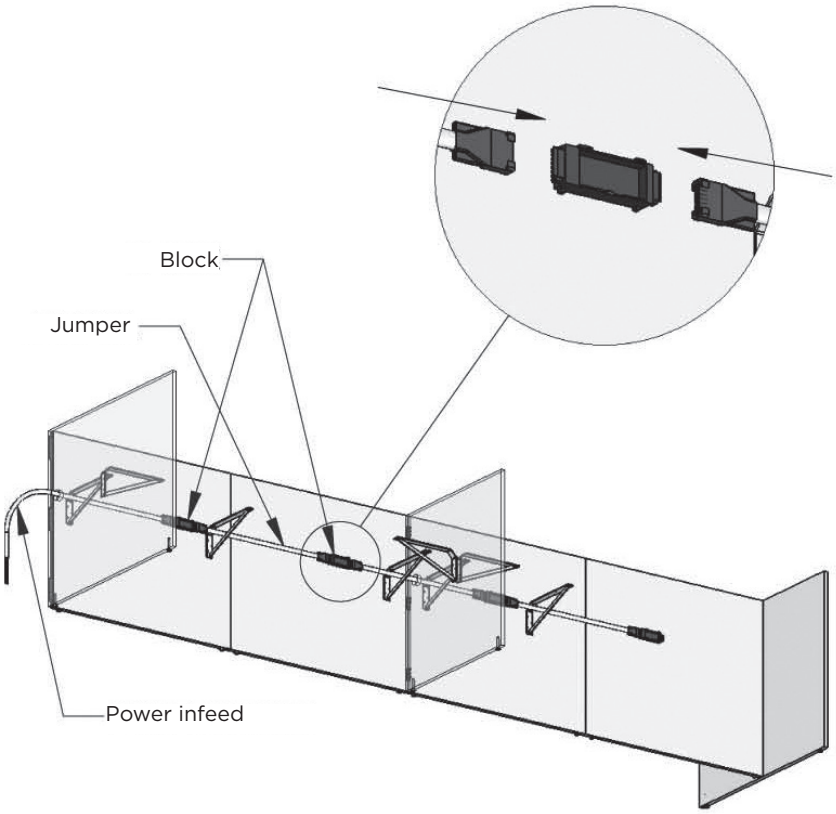

Electrical Installation

8 wire electrical installation

1. Slide block clip into groves on top of block and snap in place.
2. Position block clip 3/8″ from back edge of worksurface and screw in place.
3. Repeat for all blocks.
4. Refer to electrical plan drawing for locations and receptacles.
5. Match circuit numbers to electrical plan drawing.
6. If receptacle locations do not match plan drawing, circuits can be overloaded.
7. Push receptacle straight back into opening in block face.
8. Slide receptacle to the left until locked into place.

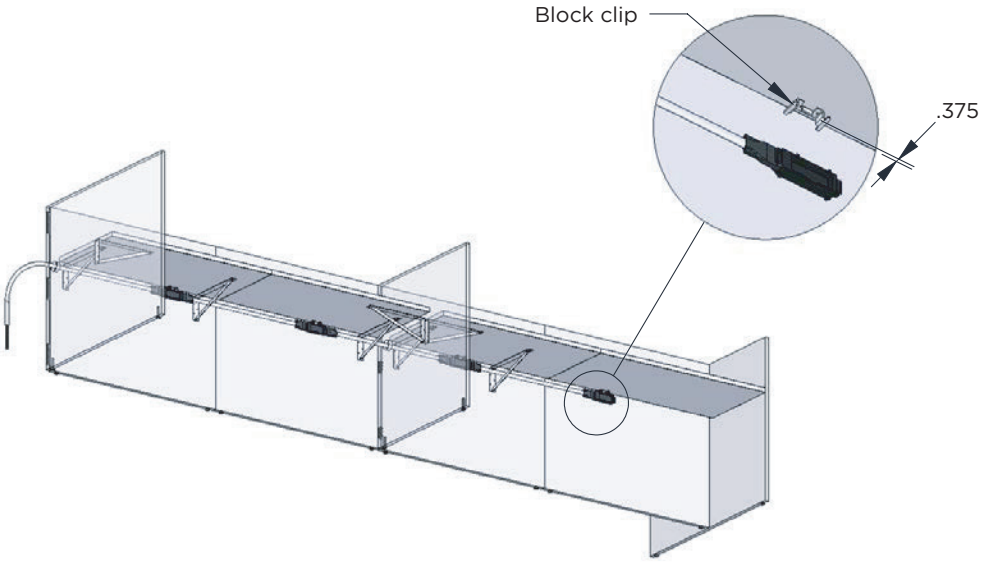

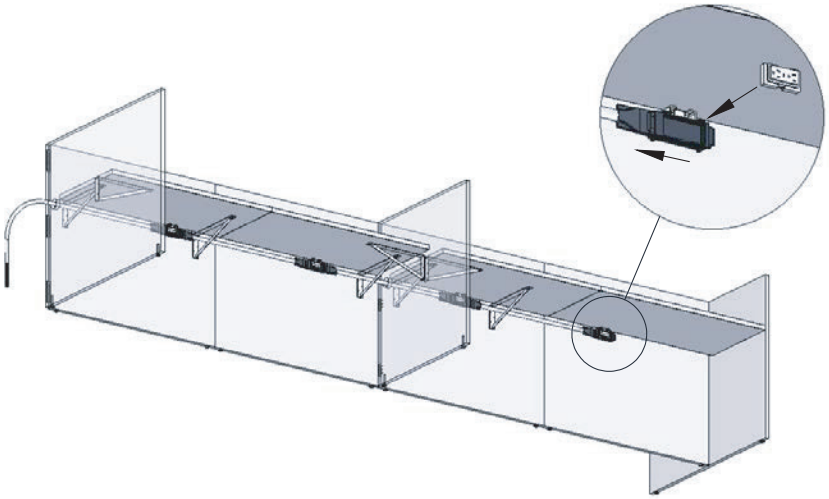

Electrical Installation

4 wire electrical installation

Refer to electrical plan drawing for:

- Electrical components needed
- Locations of electrical components
- Grommet hole locations

1. Refer to electrical plan drawing to determine grommet locations.
2. Drill 2 3/8″ diameter holes through panels where indicated.
3. Install grommets in panels.
4. Power infeed must be installed by licensed electrician.
5. Install in wall or floor outlet.

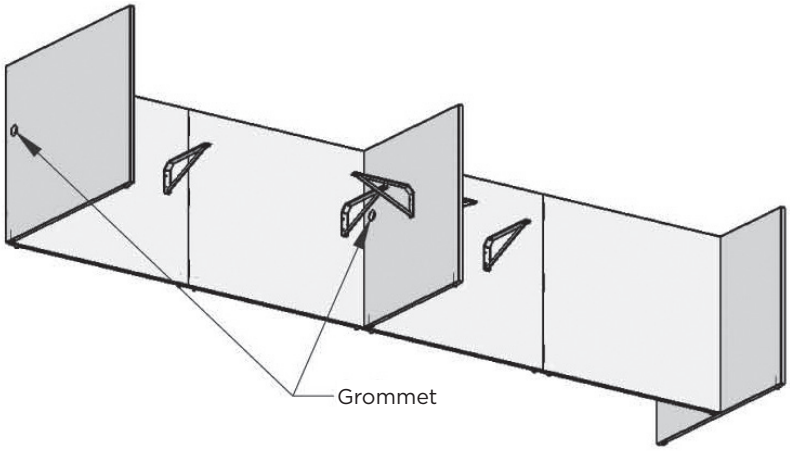

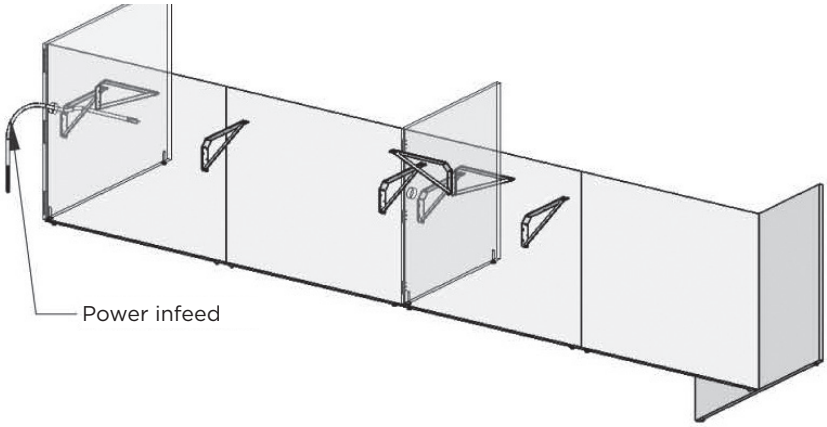

Electrical Installation

4 wire electrical installation

6. Refer to electrical plan drawing to determine components needed and locations for components.
7. Route jumpers through cable management holes in cantilever brackets and through grommet holes in panels.
8. Snap blocks and jumpers together to create chain according to electrical plan drawing.
9. Attach power infeed to chain.
10. Leave chain in place until worksurfaces and pedestals have been installed.

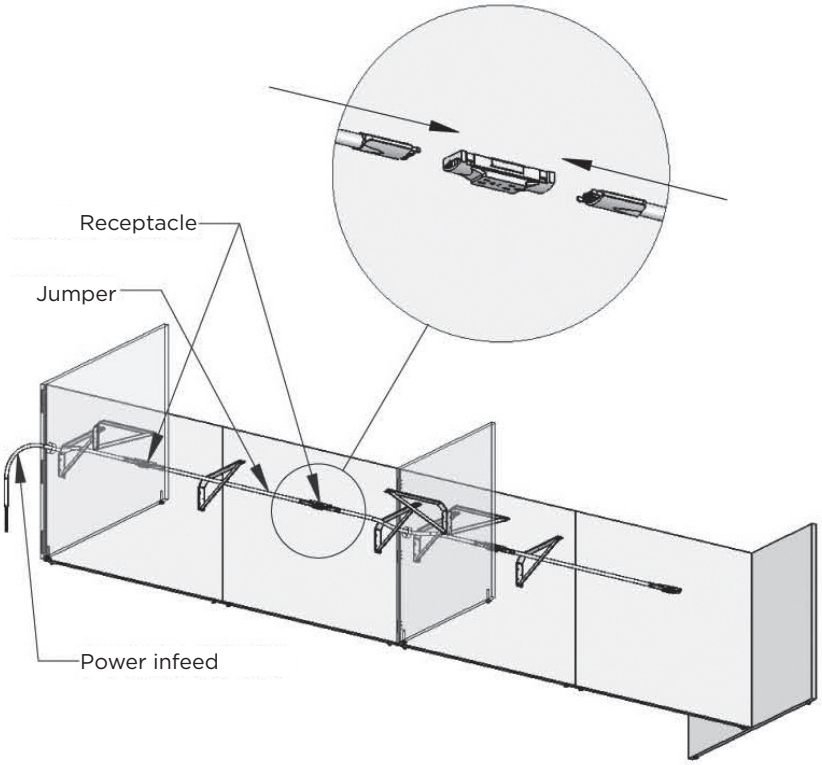

Electrical Installation

4 wire electrical installation

1. Refer to electrical plan drawing for locations of receptacles.
2. Match circuit numbers to electrical plan drawing. Circuit numbers appear on the face of each receptacle.
3. If receptacle locations do not match plan drawing, citcuits can be overloaded.
4. Hold receptacle in specified location against bottom of worksurface and pencil mark clip location; approximately 1/2″ from back edge of worksurface.
5. Remove receptacle and screw clip in place.
6. Snap receptacle into clip.

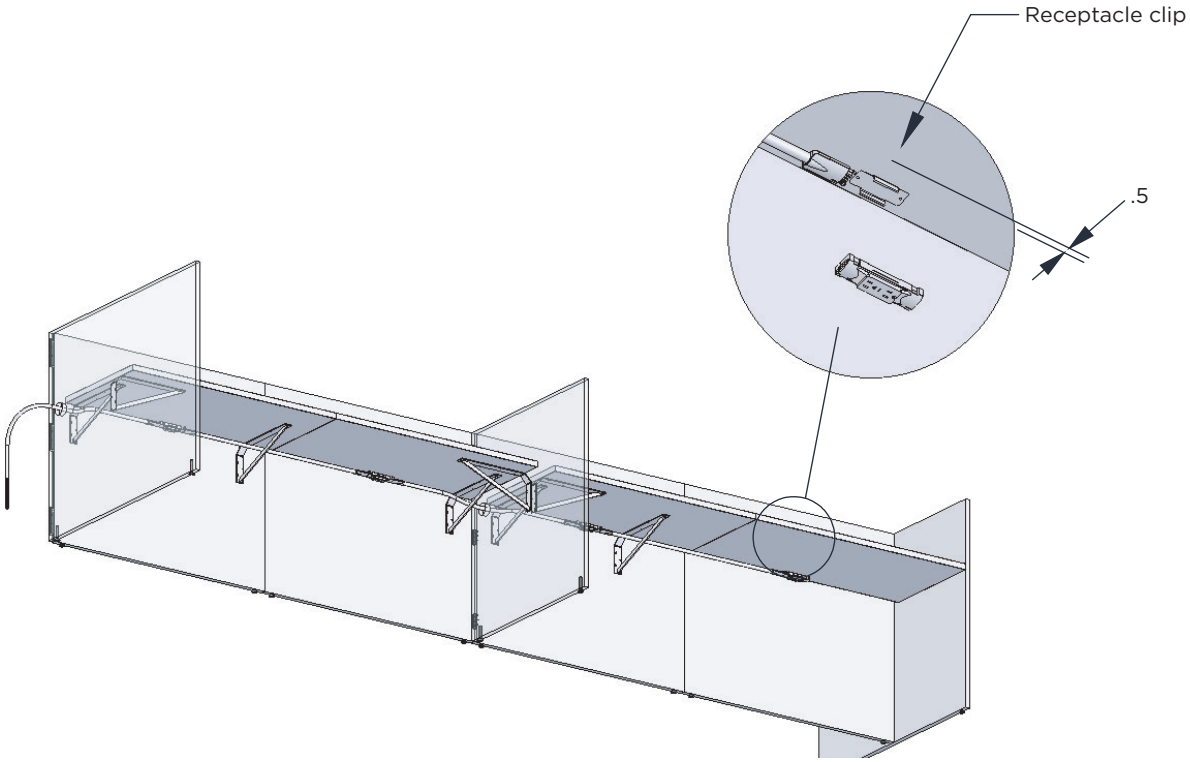

Wing assembly

1. Use HK-62 (mini-fix bolts and cams) to put the panels together. **Note**: Triangle on cam must be pointing towards the bolt to put together. (**Figure A**)
2. Use HK-10 to install the shelf, pre-drilled holes on panels to locate brackets. Use the rest of the HK-10 to install wing-end to underside of worksurface. (**Figure B**)

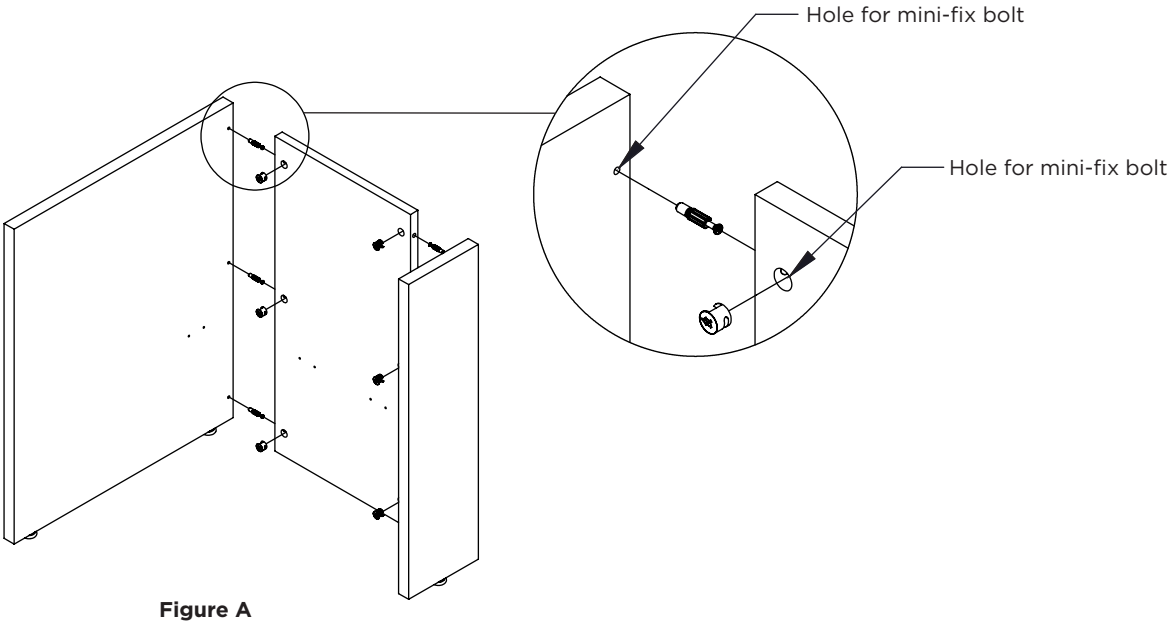

Figure A

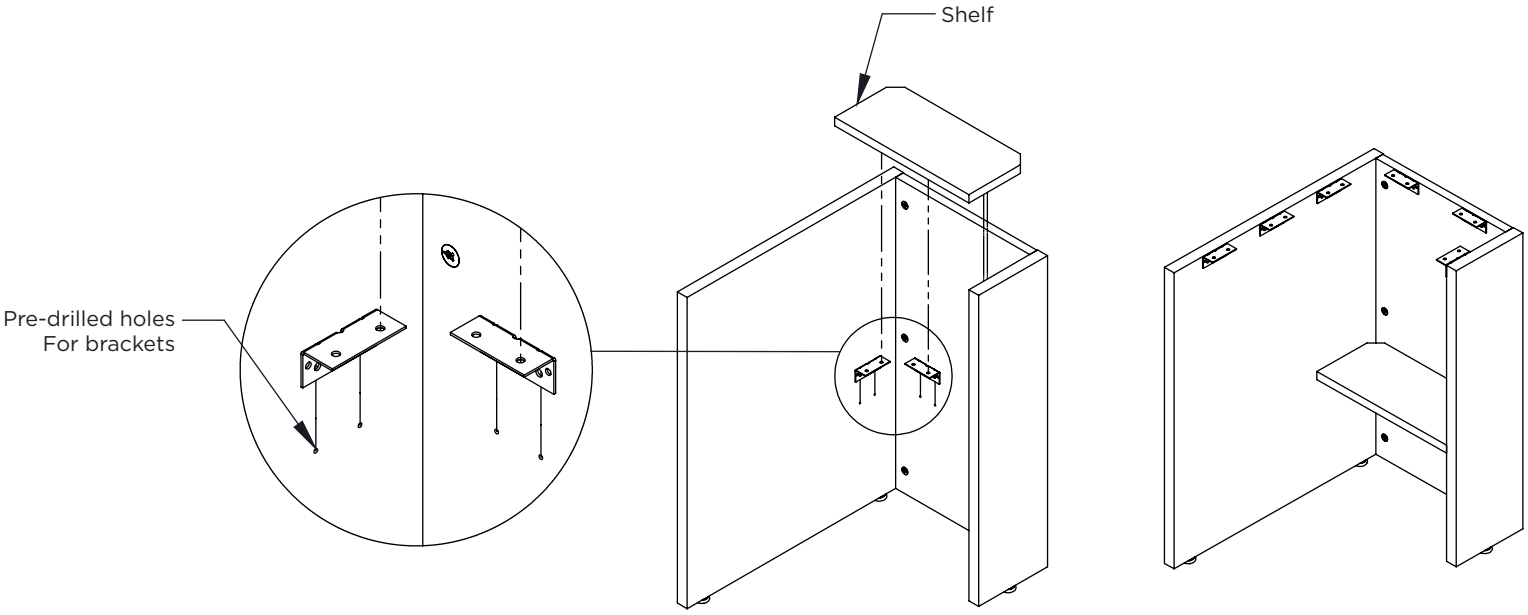

Figure B

Straightener Rail Installation

Use straightener rails on unsupported areas of worksurfaces.

1. Create a workspace to allow you to reverse bow the worksurface. The workspace should be large enough to accomodate the worksurface size.
2. Place the worksurface upside down and add ¼′ to ½″ thick shims at each end, between your workspace surface and the worksurface you are applying the straightener rail to.
3. Clamp your workspace surface and worksurface together near the center to create a slight revserse bow. Additional clamps may be needed depending on the worksurface length.
4. Attach the straightener rail based on the worksurface depth using the provided hardware, see below for sizing and placement reference.
5. Remove clamps and shims, and attach the worksurface to pedestals and/or supports as needed.

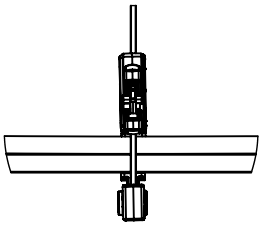

Elevation view

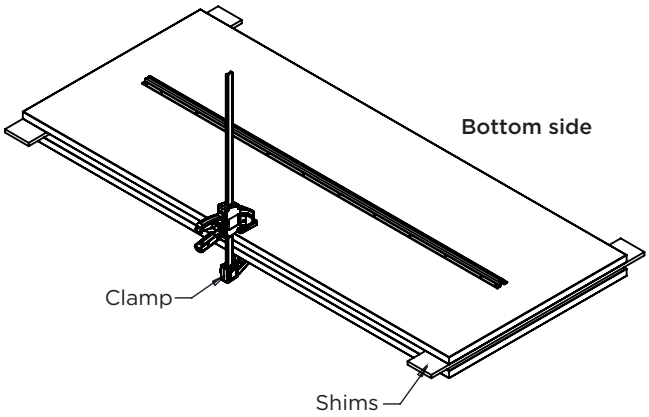

- **SPTR48** for 48-54″ unsupported area use Hardware Kit **HK-21**
- **SPTR54** for 55-60″ unsupported area use Hardware Kit **HK-22**
- **SPTR60** for 61-66″ unsupported area use Hardware Kit **HK-23**
- **SPTR66** for 67-78″ unsupported area use Hardware Kit **HK-25**

1. Center the rail in the unsupported area and space as shown on diagram below.

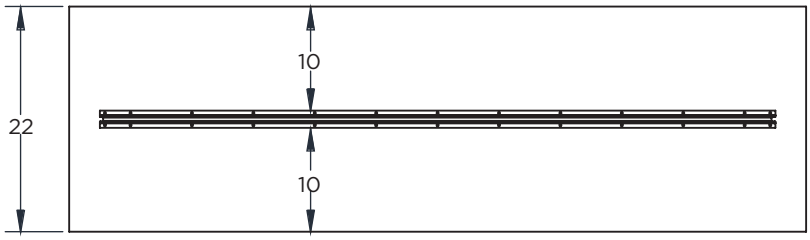

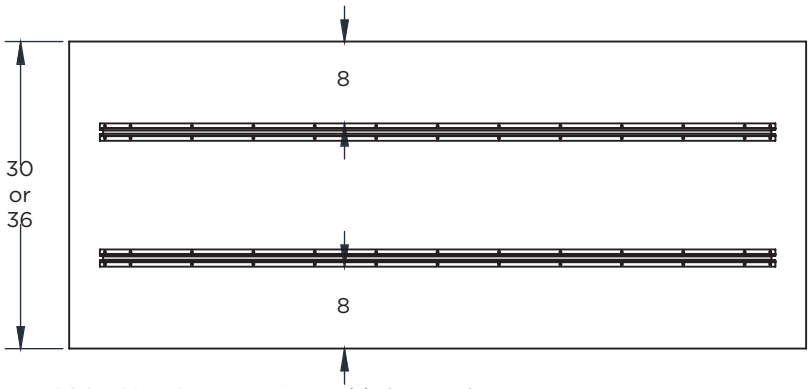

H-Base Installation

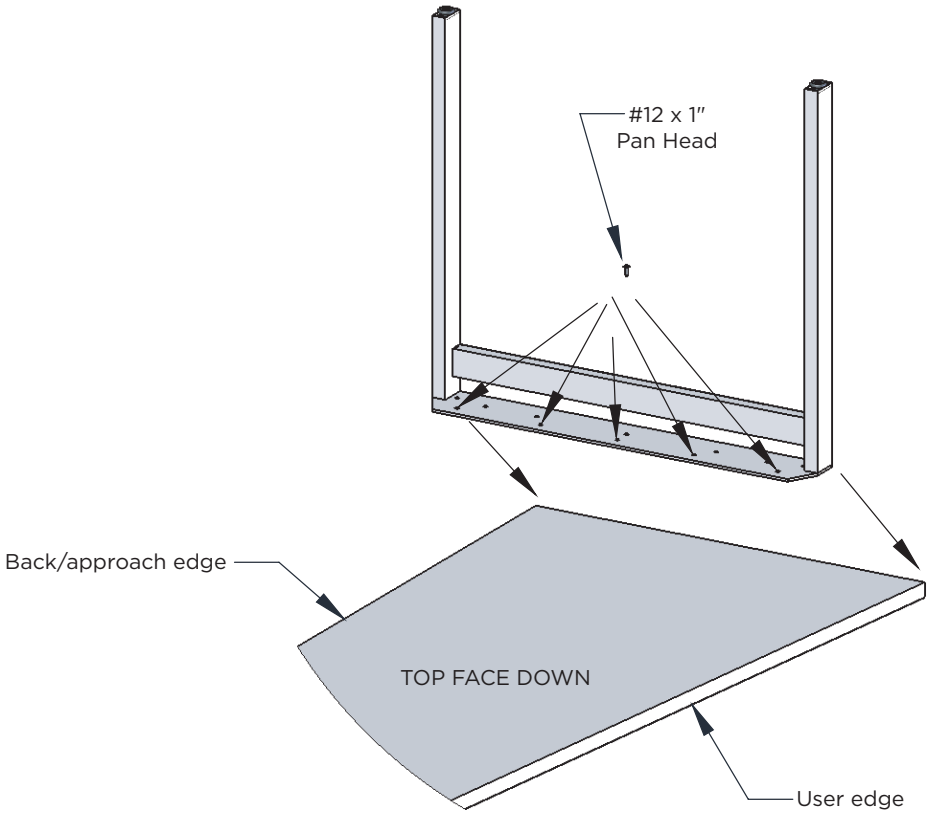

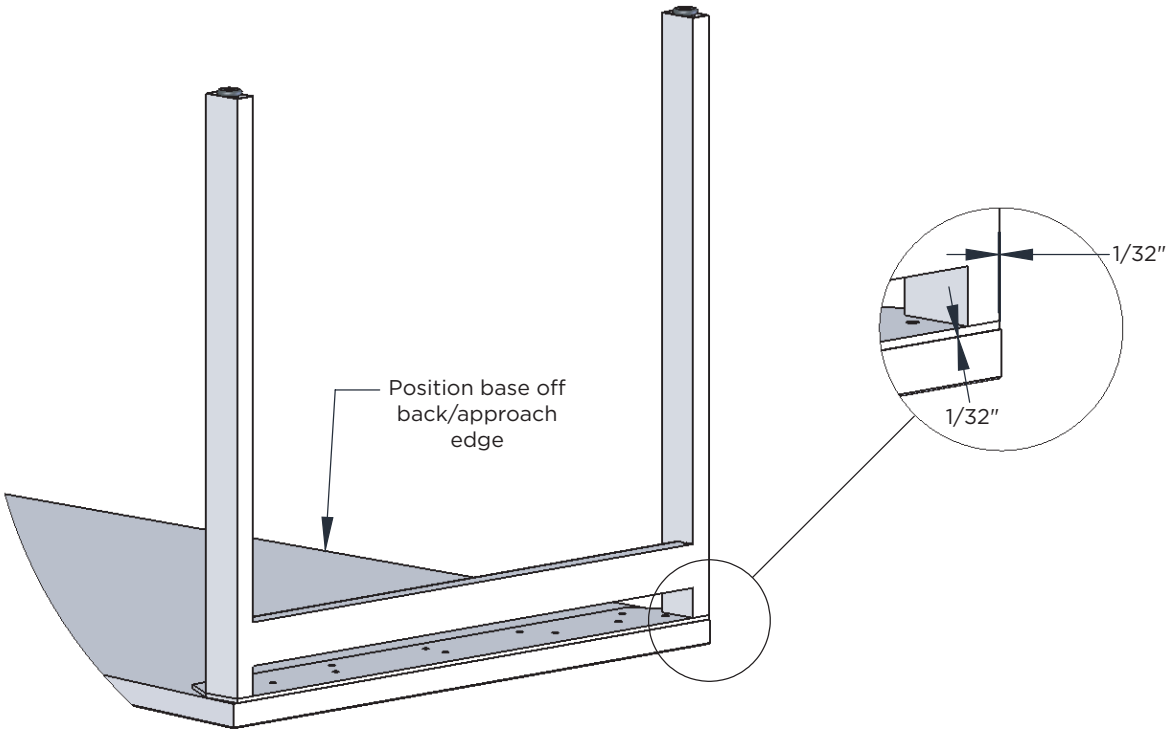

MBAR Installation

1. Install support rails on the underside of the worksurface (**Figure A**). See installation instructions for that **here**.
2. Install one leg on one end of the worksurface (**Figure B**). See installation instructions for that **here**.
3. Attach the modesty bar (MBAR) to the leg by using the self-tapped screws that came with the modesty bar. Attach the modesty bar to the worksurface by using the wood screws that came with the modesty bar. (**Figure C**).
4. Attach the other leg to the worksurface and modesty bar. Attach the modesty (optional) to the modesty bar by using the wood screws that came with the modesty bar. (**Figure D**)

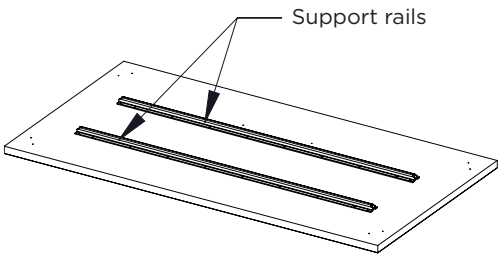

Figure A

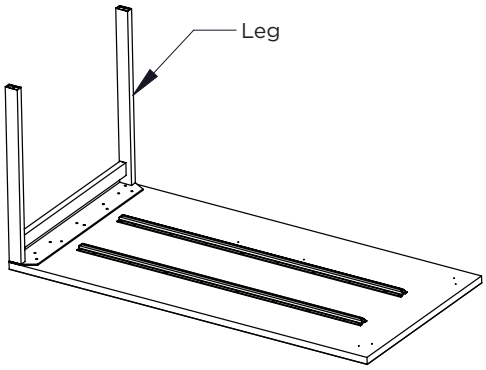

Figure B

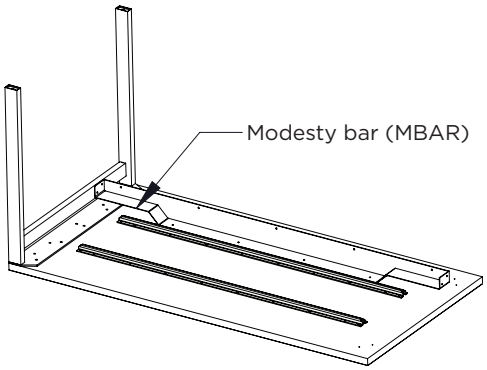

Figure C

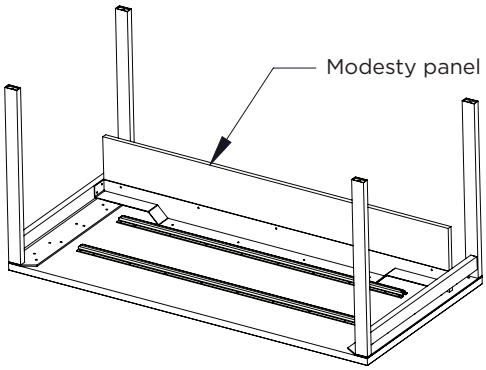

Figure D

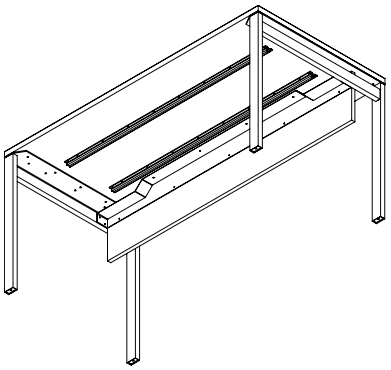

Completed desk (underside veiw)

Worksurface Support Installation

End Support

Modular End Panel

1. Position end panel flush to edge and back of top.
2. Screw L-brackets to top using #10 x 5/8″ pan head screws (Hardware Kit HK-10).
3. Position modular back panel against modular end panel and flush to back edge of top.
4. Screw back panel to end panel using 25″ L-bracket with #8 x 5/8″ flat head screws (Hardware Kit HK-11).

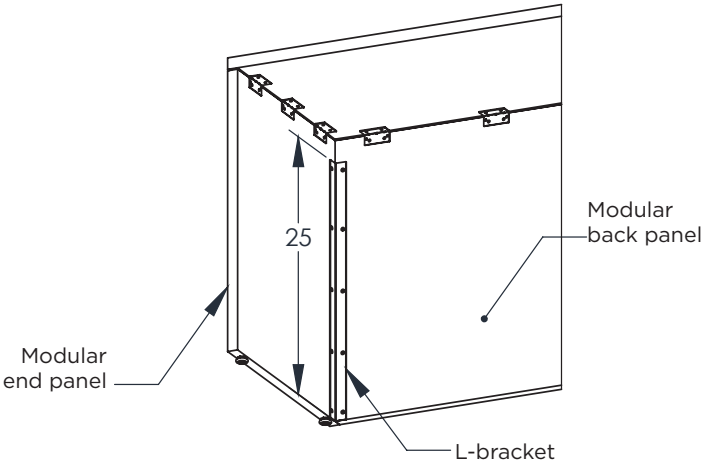

Wing End Assembly

1. Position wing end assembly flush to edge and back of top
2. Screw L-brackets to top using #10 x 5/8″ pan head screws (Hardware Kit HK-9).

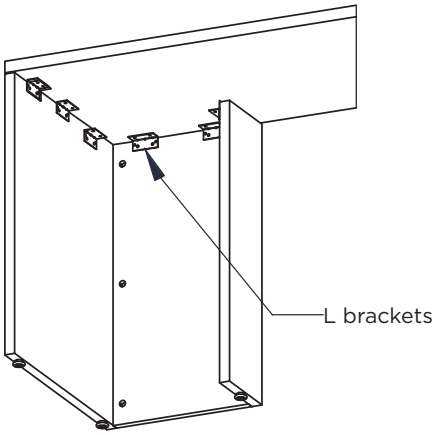

Top End Panel

1. Position end panel flush to edge and back of top.
2. Screw L-brackets to top using #10 x 5/8″ pan head screws (Hardware Kit HK-10).
3. Screw drop bracket to top and end panel using #10 x 5/8″ pan head screws (Hardware Kit HK-95).

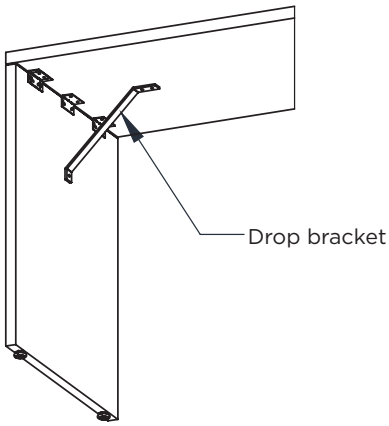

Worksurface Support Installation

Center Support

Square Metal Support - Item #6-L2S

1. Position base 2″ off edge of worksurface anywhere extra support is needed.
2. Pilot holes on mounting plate and attach to worksurface using (8) #12 x 1″ Phillips pan head screws.

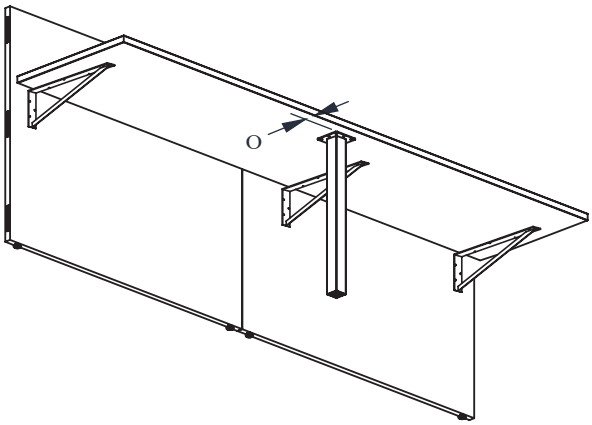

Wall Panel Support - #6-2809WPSP, 6-2812WPSP, 6-2818WPSP

1. Attach pedestal brackets to wall panel support with #8 x 5/8″ pan head screws from HK-83. See **Detail A** for location of brackets.
2. Place wall panel support in center of open span between supports (pedestals, cantilevers, etc.).
3. Screw wall panel support with pedestal brackets to the wall panel with the remaining #8 x 5/8″ pan head screws from HK-83.
4. Screw to underside of worksurface with l-brackets and #10 x 5/8″ pan head screws from HK-10.

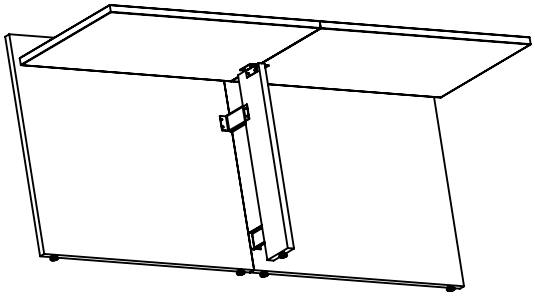

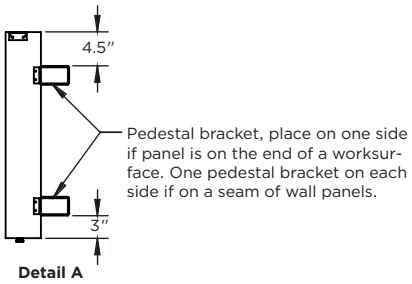

Detail A

Back Panel Support - Item #6-2812SP

1. Place back panel support in center of span between supports (pedestals, cantilever, etc.).
2. Screw to back panel and worksurface using #10 x 5/8″ pan head screws (Hardware Kit HK-10) & #8 x 5/8″ flat head screws (hardware Kit HK-11)

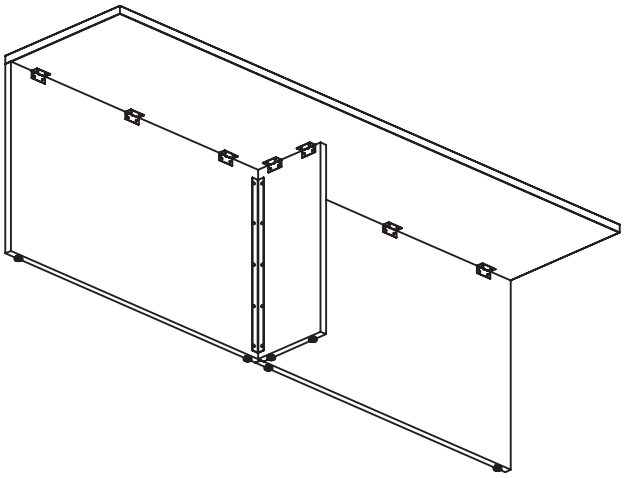

T Support - Item #6-2812SB2, 6-2818SB2

1. Join both panels together with #8 x 1 ½″ flat head screws from HK-56.
2. Place support in center of open span or a seam of worksurfaces.
3. Screw to underside of worksurface with l-brackets and #10 x ⅝″ pan head screws from HK-10.

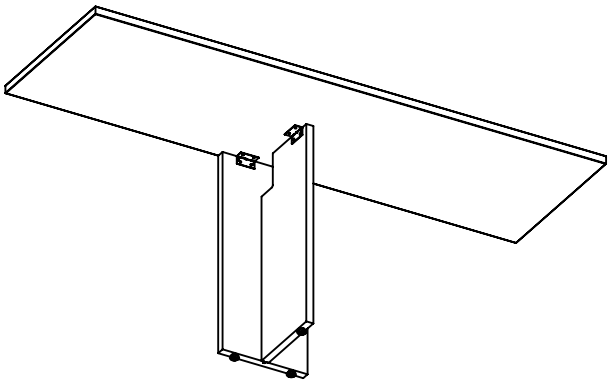

Worksurface Installation

Top placement

1. Determine location of worksurfaces before placing them on cantilever brackets.
2. Some worksurfaces need to be connected before being placed on brackets and pedestals (see next page).
3. Consult worksurface plan drawing for proper placement.
4. Verify 1 1/2″ cable management gap is required or if worksurfaces are mounted directly to wall panels.

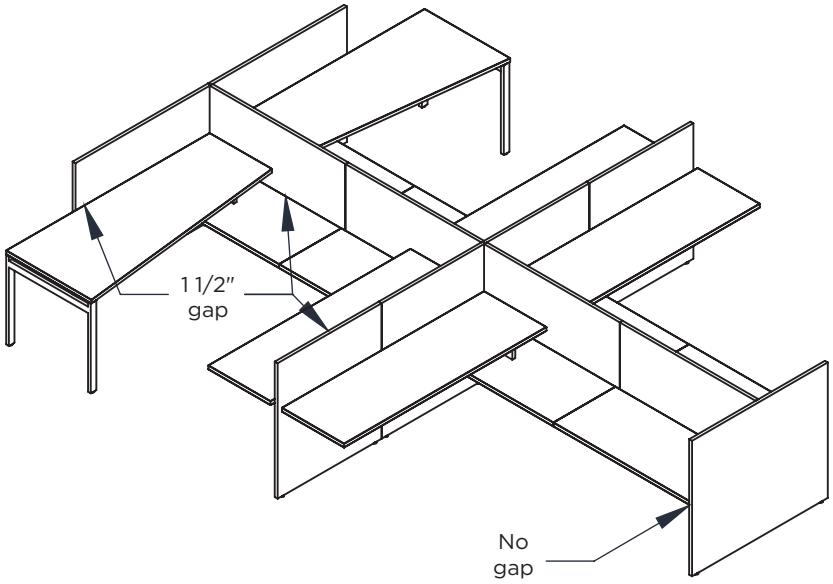

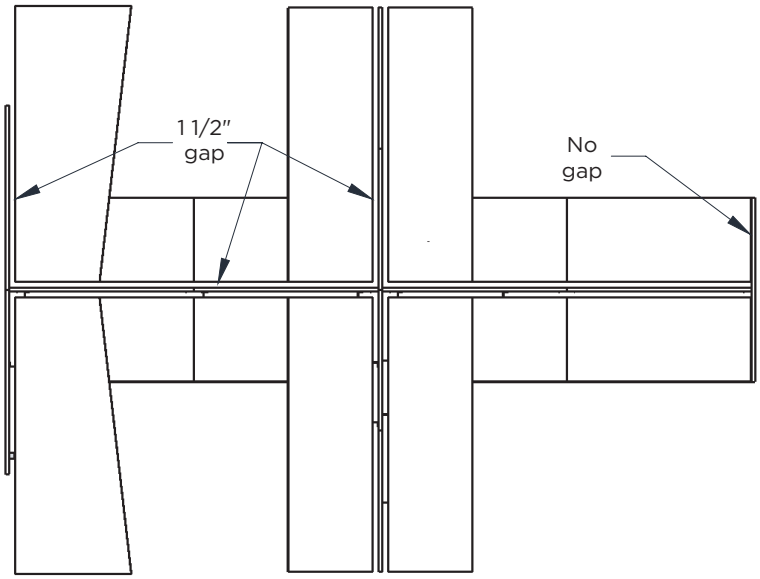

Worksurface Installation

Clamp plate installation

Clamp plates available from item #CP-1 & Hardware Kit HK-6.

1. Attach clamp plates.
2. Connect spine wall worksurfaces.
3. Attach run off worksurfaces.
4. Secure worksurfaces to cantilever brackets.

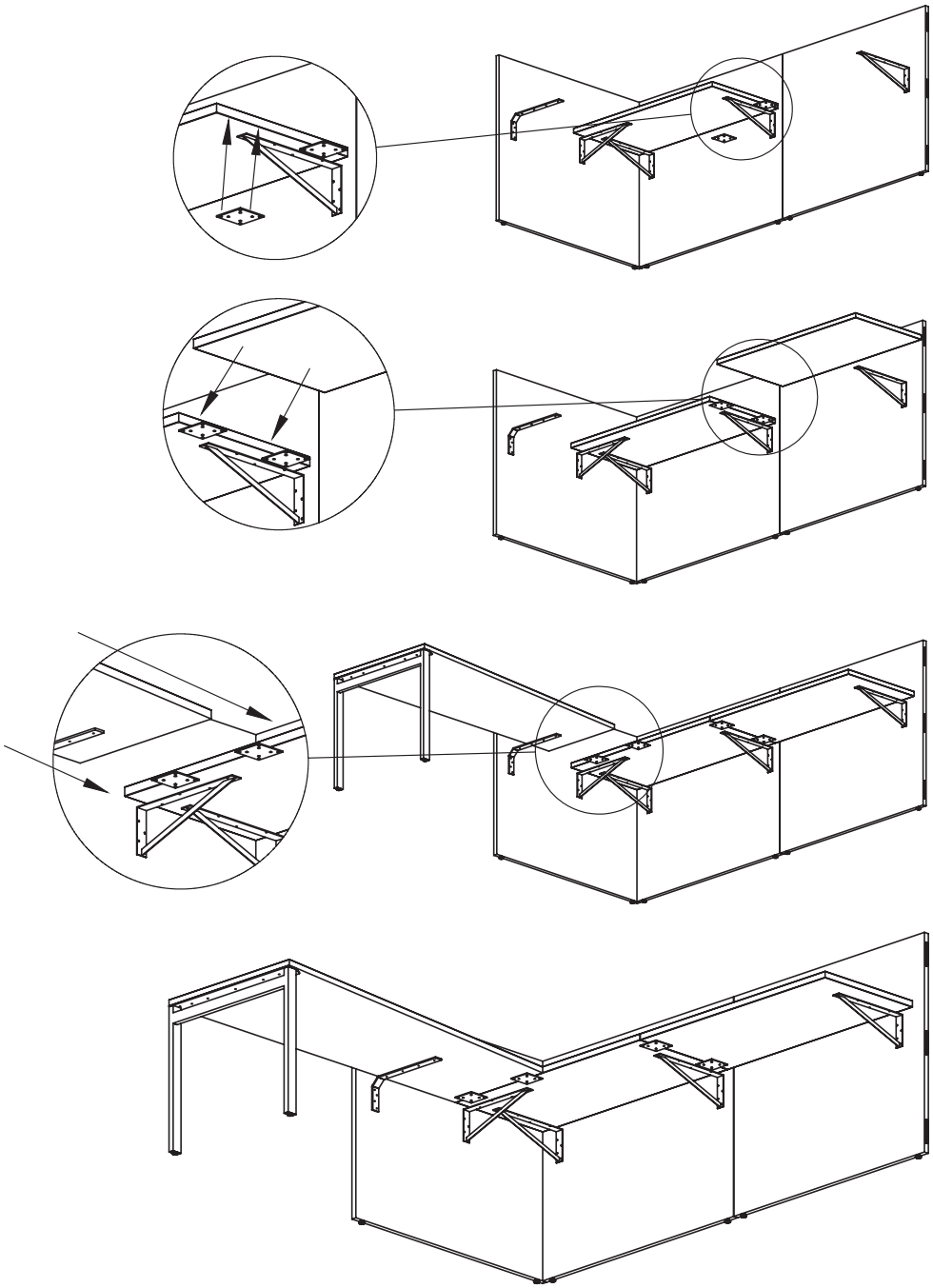

Worksurface Installation

L-bracket installation

Tall storage to worksurface connection

1. Mark side of storage tower for required height and attach L-bracket to side of storage tower with screws (Hardware Kit HK-11).
   - 27 3/8″ to bottom of end panel for worksurface height.
   - 21 3/8″ to bottom of end panel for lower height.
2. Move storage tower into position.
3. Back of storage tower should be flush to back end of worksurfaces.
4. Position worksurface on cantilever brackets and L-bracket. Keep 1 1/2″ gap for wire management, if needed.
5. Attach with screws.

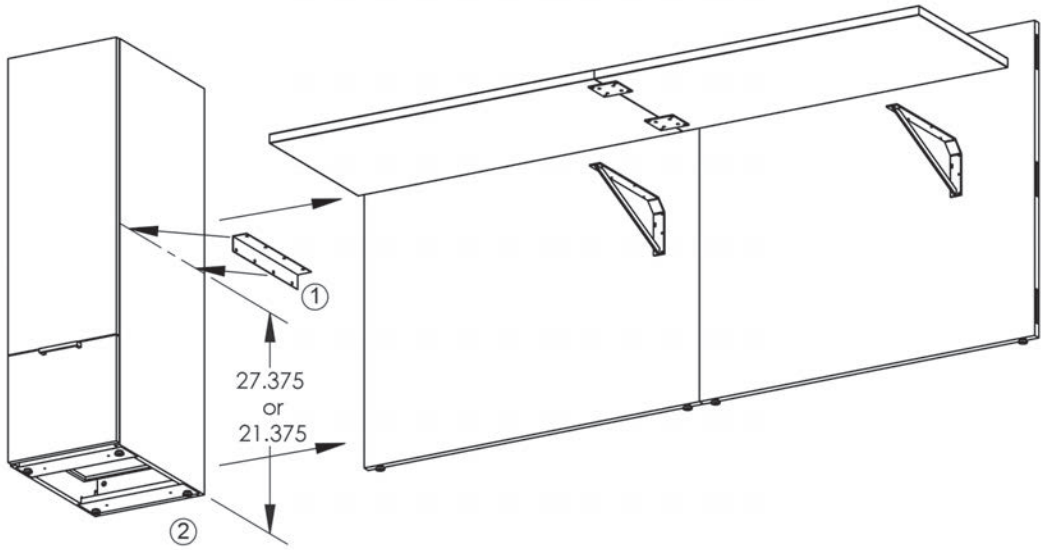

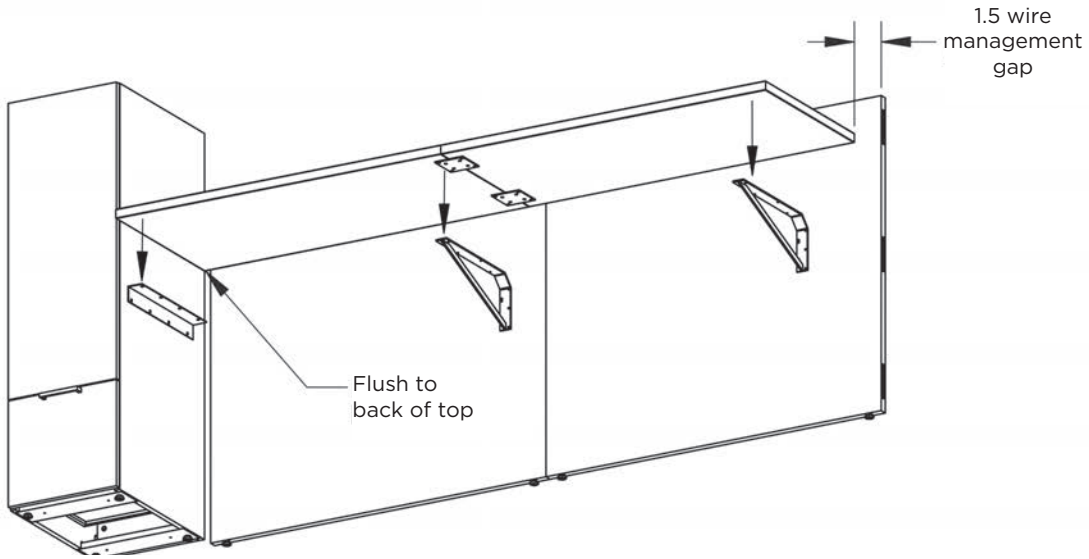

Worksurface Installation

Riser support installation

1. Flip upper top over and mount riser support to bottom side.
2. Space riser support 2″ from back edge and 2″ off edge
3. Screw L-brackets in boxed in area to top (Hardware Kit HK-9).
4. Flip upper top with attached riser support over and align upper top with lower top.
5. Pencil mark corners of riser support.
6. Remove upper top with attached riser support.
7. Bore three 3/16″ holes through lower top. Holes should be 1/2″ to the inside of the pencil marks.
8. Replace upper top with attached riser support.
9. Screw lower top to riser support using three screws (Hardware Kit HK-12).

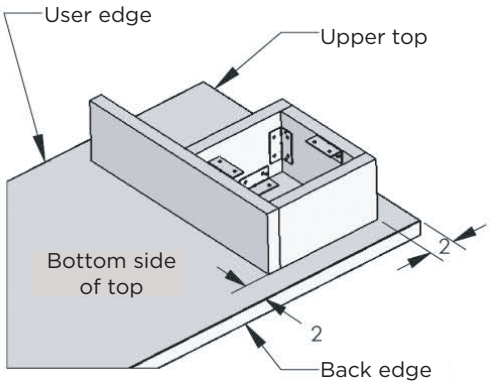

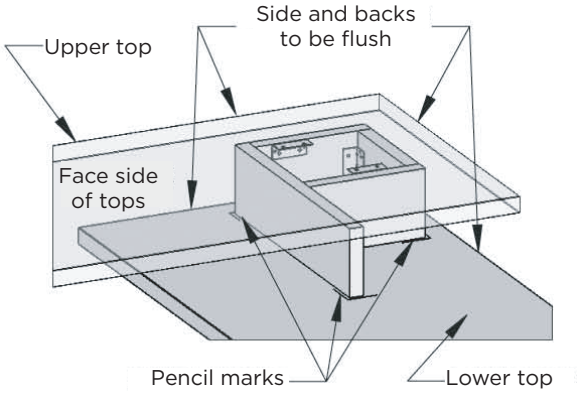

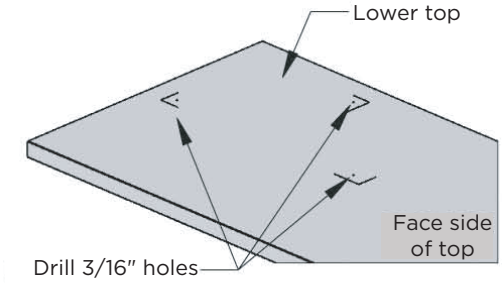

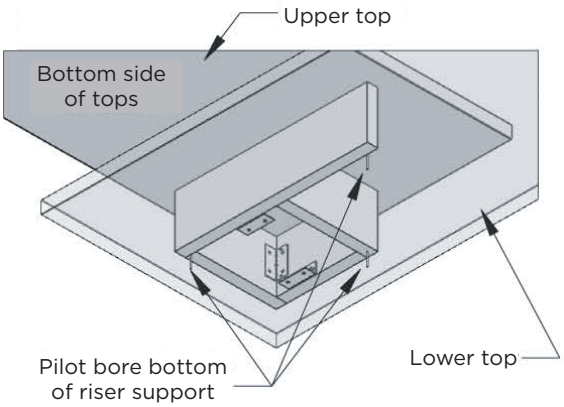

Worksurface Installation

T-support installation

1. Drill two holes on the underside of the upper worksurface 1/8″ diameter by 1/8″ deep for mini-fix bolt (Hardware Kit HK-62).
2. Screw mini-fix bolt into predrilled holes.
3. Attach T-support to upper worksurface by aligning the mini-fix bolts with mini-fix cams on the T-support.
4. Secure mini-fix by turning mini-fix cams clock-wise on half turn.
5. Continue with steps 4-10 on riser support installation instructions on previous page.

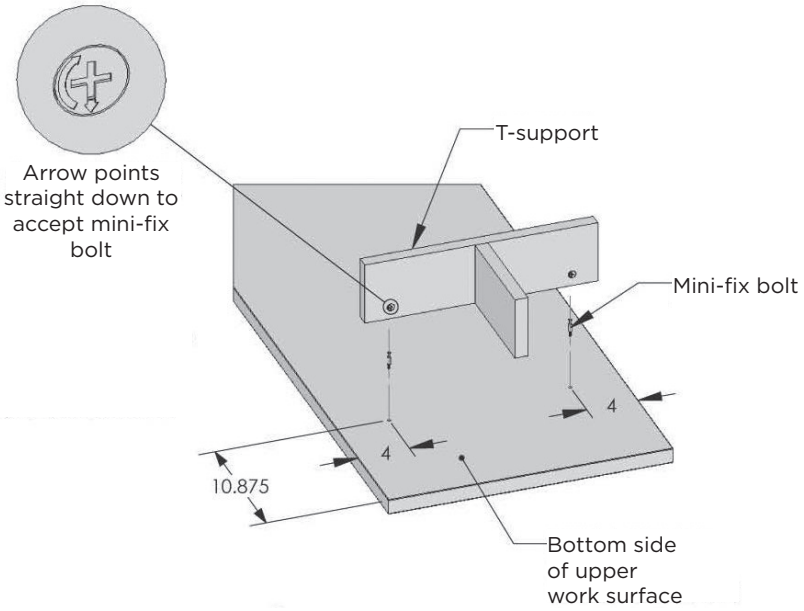

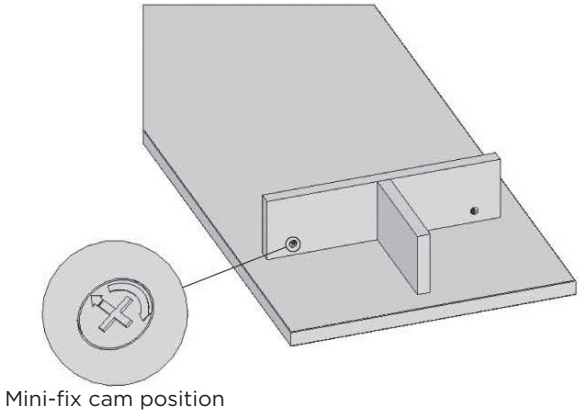

Shared Shelf/Organizer Installation

All wall panels, worksurfaces and worksurface supports (including drawer pedestals), must be in final installed position and securely assembled before installing the items with press fit brackets.

1. Secure the press fit bracket to the transaction shelf, see Detail A.
2. Place item with brackets on top of the wall panels. Tighten the bolts on the bracket with a 3/16″ Allen wrench so that the other side of the bracket securely tightens onto the wall panels.
3. Once all brackets are tightened, secure the other side of the bracket.

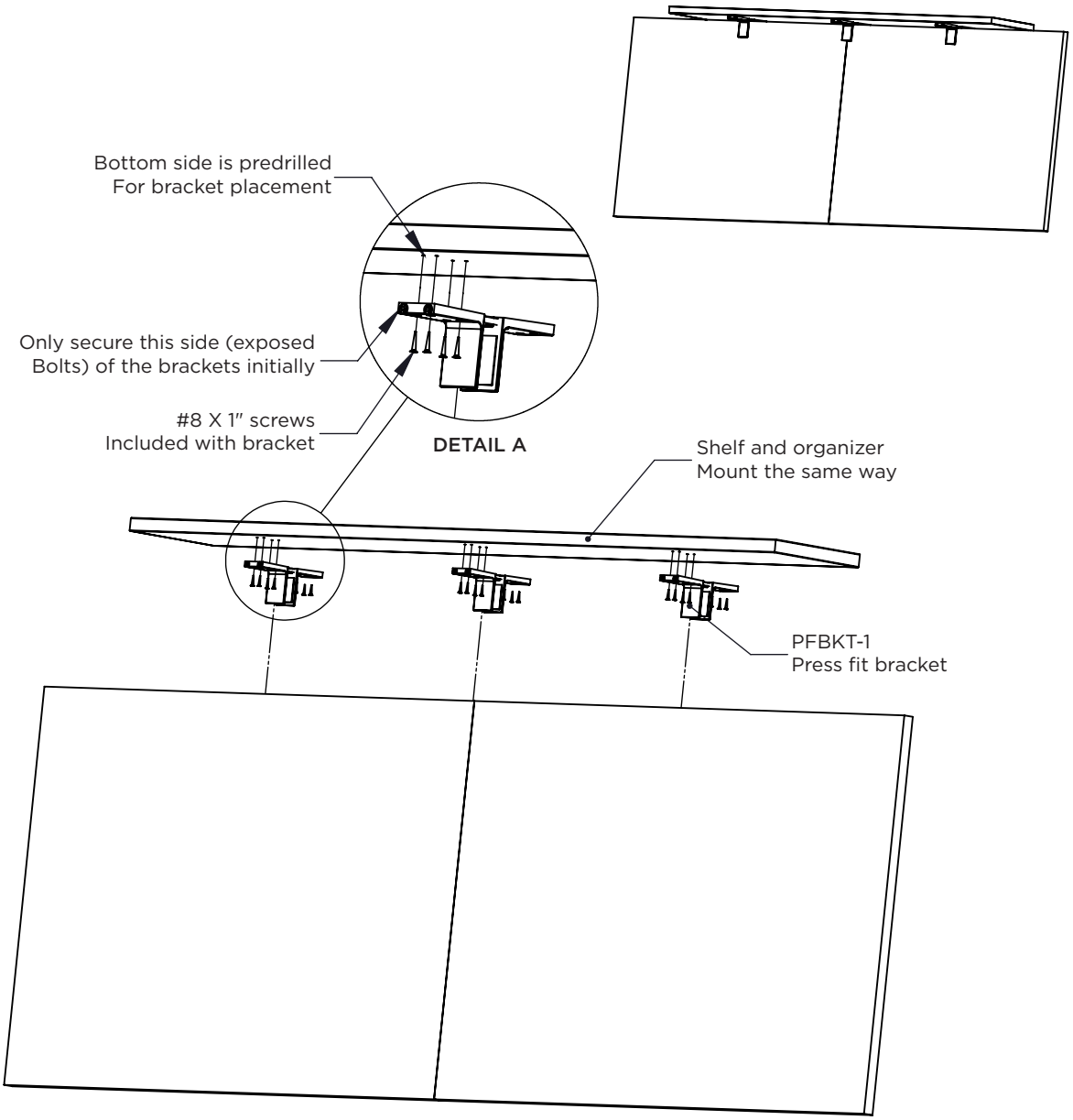

Shared Shelf/Organizer Installation

Shelf mounted installation

1. Place organizer shelf.
2. Position organizer on shelf so bottom is flush with shared shelf.
3. Replace shelf screws with longer screws provided with organizer (Hardware Kit HK-16).

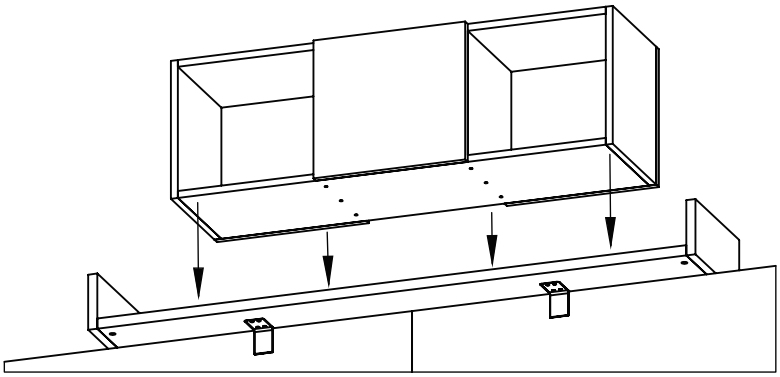

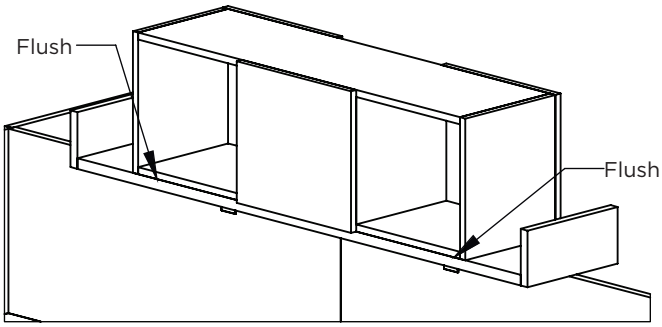

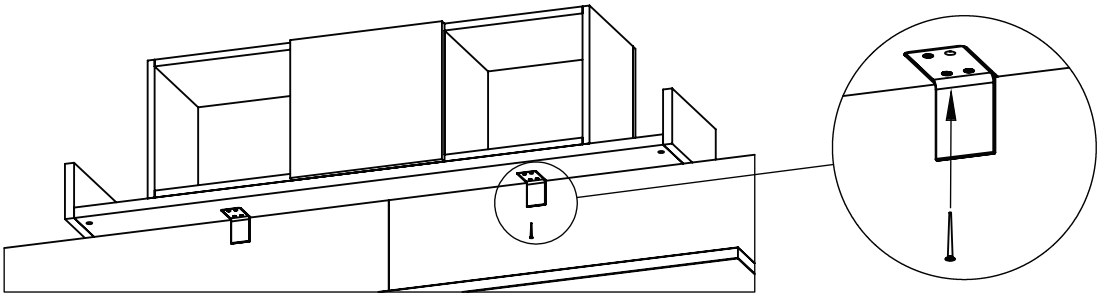

Modesty Installation

Wood Modesty Installation

1. Assemble modesty brackets to modesty panel by screwing bolts through bracket and into insert nuts in modesty panel (Hardware Kit HK-18).
2. Position modesty 4″ from edge of pedestal pressed against pedestal back panel.
3. Screw brackets to bottom of worksurface.

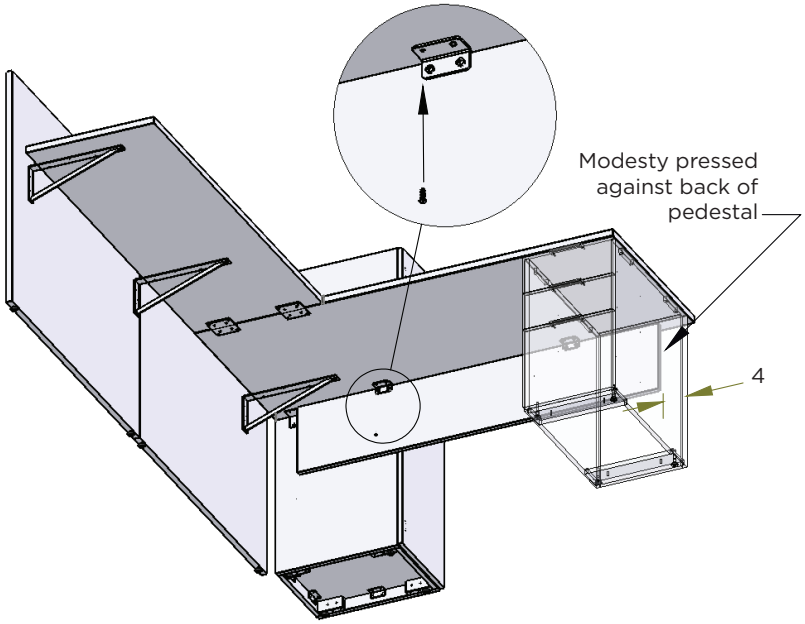

Acrylic Modesty Installation

1. Assemble modesty brackets with screw caps to modesty panel by screwing bolts through bracket, acrylic modesty panel and into screw caps (Hardware Kit HK-18).
2. Reverse brackets that are positions directly behind a pedestal.
3. Position modesty 4″ from edge of pedestal pressed against pedestal back panel.
4. Screw brackets to bottom of worksurface.

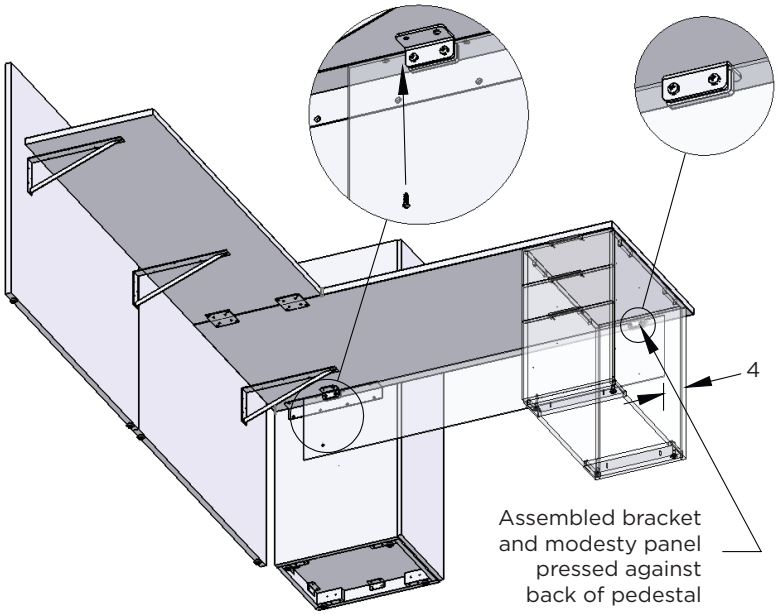

Modesty Installation

Front edge modesty panel

Item #6-WEMW, 6-WEMK, 6-WEMA, 6-WEMP

1. Attach brackets (Item # WEBKT-1, WEBKT-2) to modesty panel.
2. Tighten screws.
3. Attach assembled modesty panel to approach edge of worksurface.
4. Tighten screws.

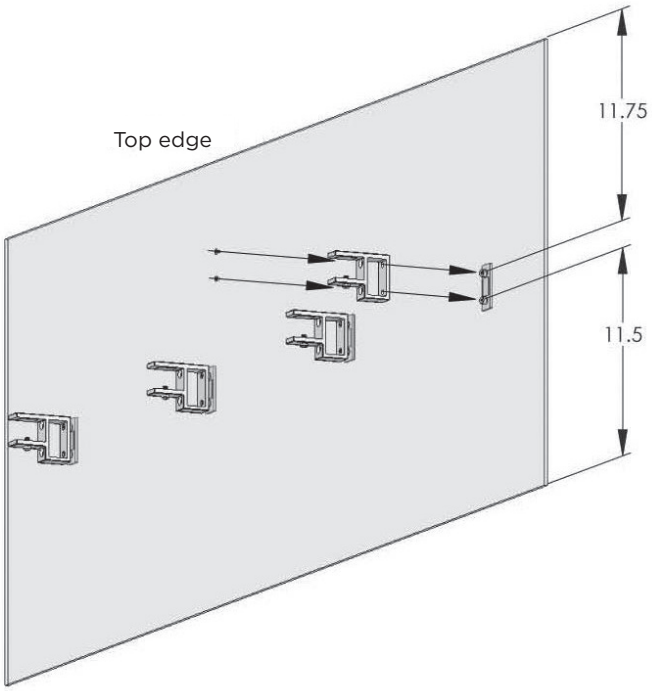

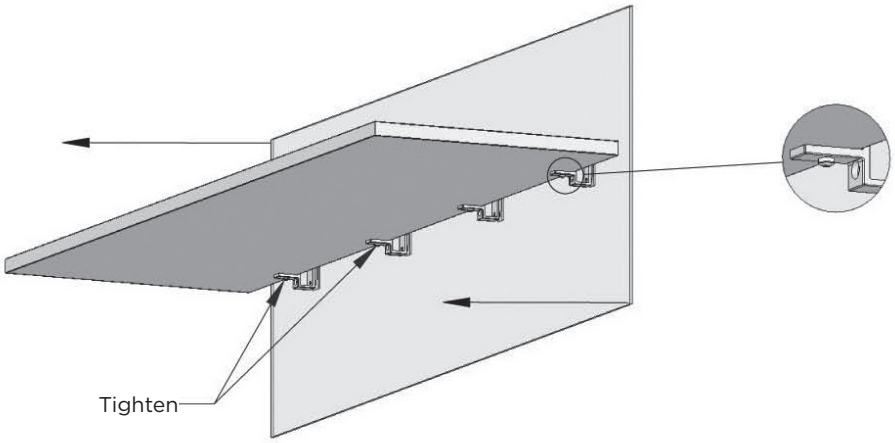

Privacy Panel Installation

Item #6-PVPG, 6-PVPP, 6-PVPA

1. Position brackets (Item # PVPBKT-1) on bottom edge of privacy panel, usually 8″ from the edge of panel.
2. Assemble two halves of brackets with privacy panel between two halves.
3. Tighten screws to ensure panel in place.
4. Hang completed assembly on top edge of wall panel, leaving 1″ gap on either side of privacy panel.
5. Panel and bracket locations may vary. Consult plan drawing.

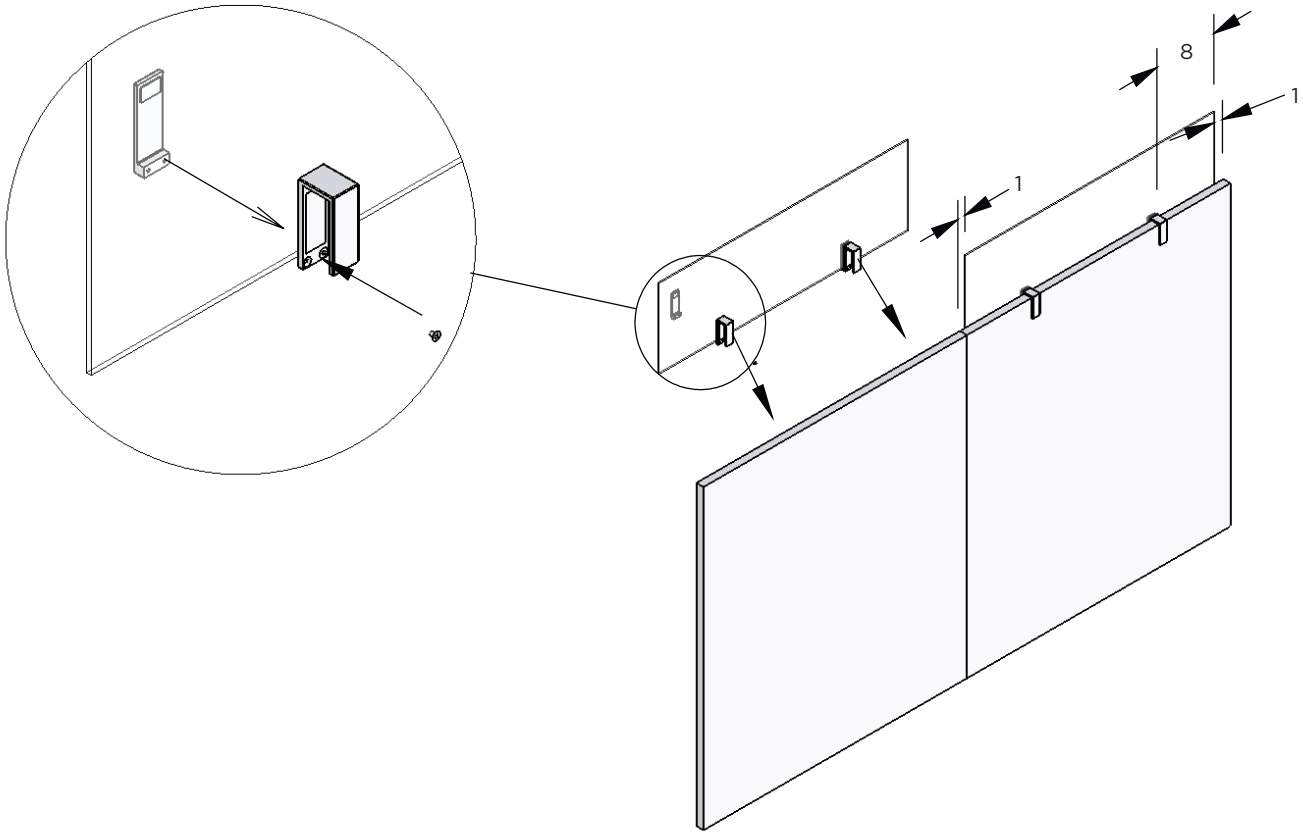

Privacy Panel Installation

Spine wall privacy panel

1. Position brackets (Item # PVPBKT-2) on bottom edge of privacy panel, usually 8″ from edge of panel.
2. Assemble two halves of brackets with privacy panel between two halves.
3. Tighten screws to secure panel in place.
4. Hang completed assembly on top edge of spine wall panel, leaving 1″ gap on either side of privacy panel.
5. Panel and bracket locations may vary. Consult plan drawings.

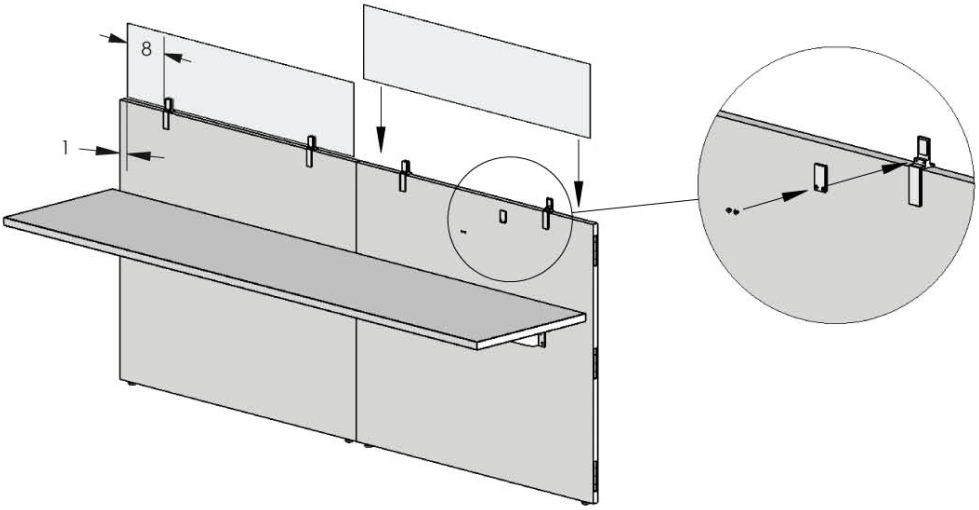

Tackboard Installation

Wall panel tackboard installation

1. Peel backers off of velcro strips.
2. Carefully position tackboard in desired location.
3. Apply pressure to tackboard for good adhesive bond.

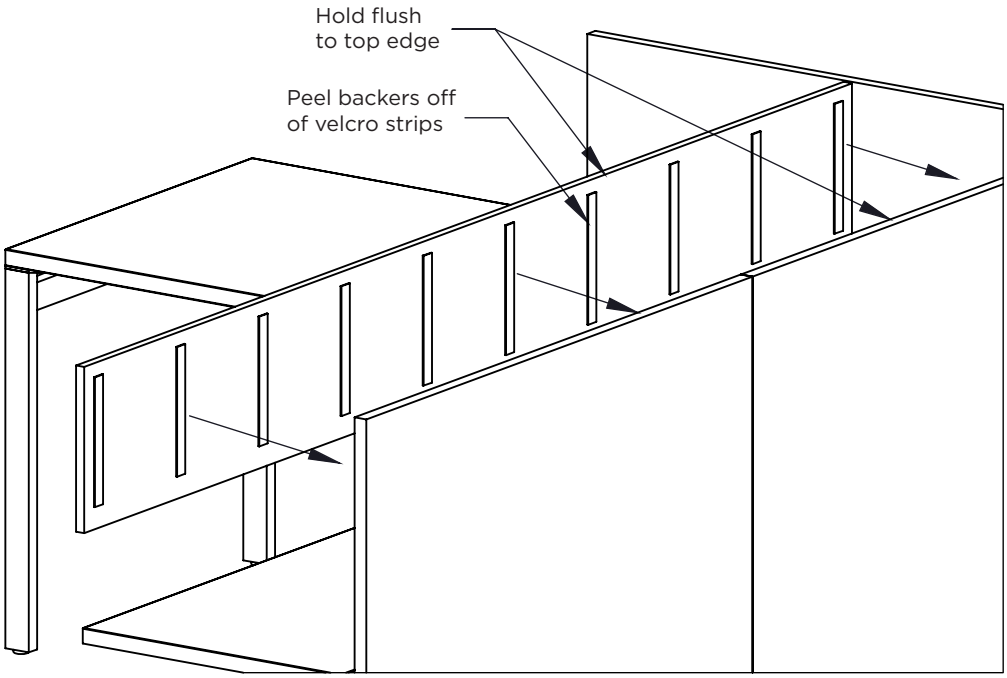

Tackboard Installation

1. Determine which keyhole to use for your size tackboard.
2. Guide tackboard brackets behind wallmount until keyhole slips over shoulder screw on back of wallmount.
3. Level brackets vertically and secure to wall with screw using the lower hole A. **Note**: Refer to bracket spacing table to determine the location for brackets and shoulder screws.
4. Pull paper backing from velcro loop to expose adhesive backing. **Note**: Velcro should be stapled to the backside of the tackboard
5. Make sure the velcro loop stays attached to the velcro hook.
6. Inspect back side of tackboard and remove any dirt or foreign matter.
7. Position light cord behind tackboard.
8. Center tackboard horizontally with wallmount and press firmly along the velcro loop to ensure proper contact.

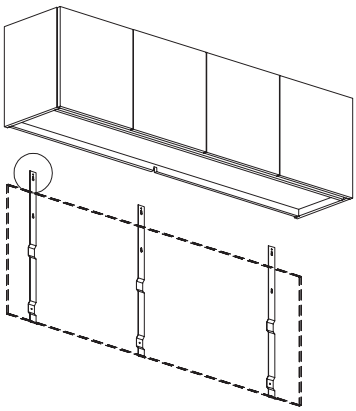

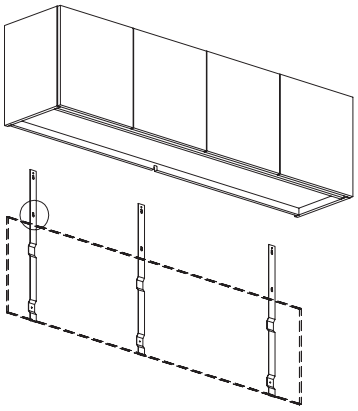

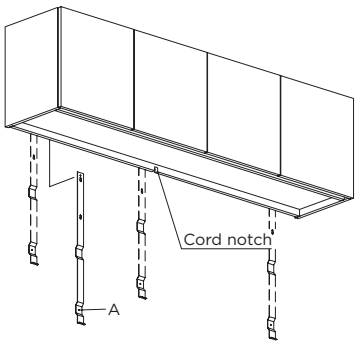

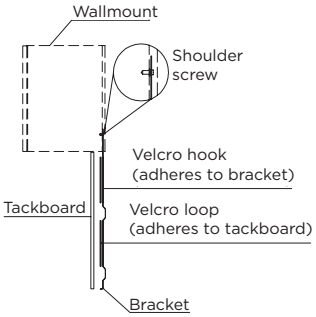

Bracket Spacing Table

0"-40" **Location:**	use (2) brackets (2) 6" from edges
40 1/8"- 80" **Spacing:**	use (3) brackets (2) 6" from edges, (1) 2" from center towards left side.
80 1/8" -100" **Spacing:**	Use (4) brackets First bracket to be 6" in from the outer edge. Second bracket to be 31 3/4" in from the outer edge.
100 1/8" - 120" **Spacing:**	Use (4) brackets First bracket to be 6" from the outer edge. Second bracket to be 38 7/16" in from the outer edge.
Note:	Brackets are to be spaced from each side (right and left)

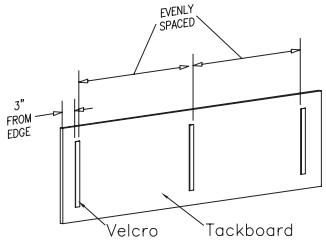

Highback organizer installation

1. If possible, install the tackboard with the highback organizer lying on its back.
2. Center tackboard on organizer and mark corner location with masking tape.
3. Remove paper backing on factory installed velcro strips.
4. Align tackboard with previously marked corners on organizer and press in place.

Note: It is important to apply pressure to tackboard to insure proper bonding of adhesive backed velcro. The adhesive backed velcro bonds by pressure and it's holding power will increase with time if applied properly. It is important the tackboard be in the correct position the first time. Do not attempt to reposition tackboard as this will weaken the bond.

Seat Cushion Installation

1. Check installation drawing for cushion locations.
2. Peel protective backing from Dual-Lock strips to expose adhesive.
3. Position cushion where desired with back edge flush to back edge of case.
4. Usually the cushion will also be flush to the side of the case.
5. There will be 7/8″ overhang to the top, 1/8″ overhang to the drawer front, if present.
6. Apply pressure to cushion to seat the adhesive.

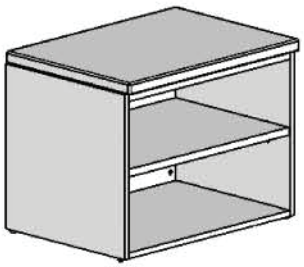

Low height

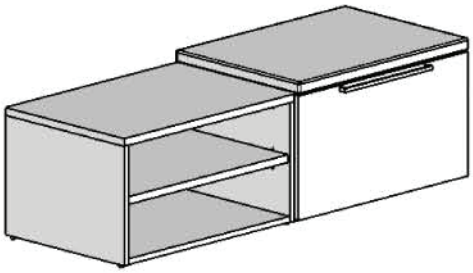

Bench height

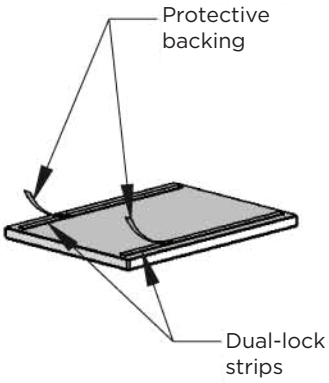

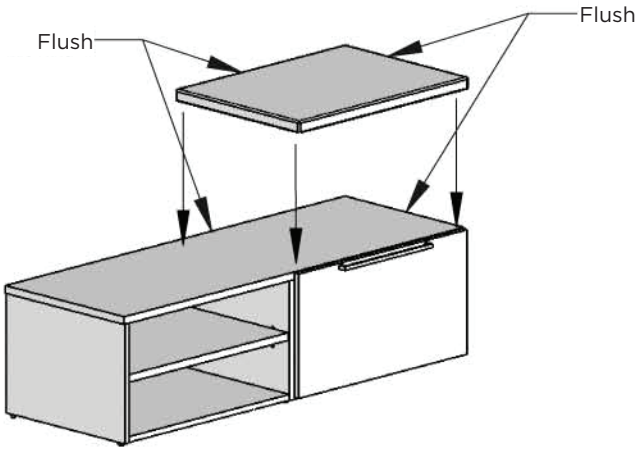

Wall Mounted Storage Installation

1. Determine desired location of unit. Be sure to leave enough space below unit for computer monitors or other equipment that may be placed under the cabinet.
2. Measure from the floor to where the top of the cabinet will be and lightly draw a level, horizontal line (Line A) using a carpenter's level.
3. Draw another line (Line B) 6 1/4″ below line A. This is where the mounting rail will be fastened to the wall.
4. Drill holes for appropriate wall fasteners through mounting rail.
5. Align bottom edge of mounting rail on line B and mark location of mounting holes.
6. Fasten mounting rail to wall.
7. Hang cabinet on mounting rail. The mounting rail attached on the back of the cabinet will rest on the mounting rail on the wall.

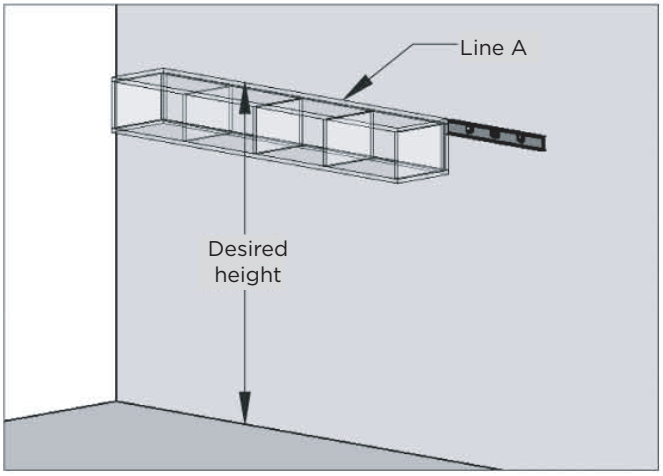

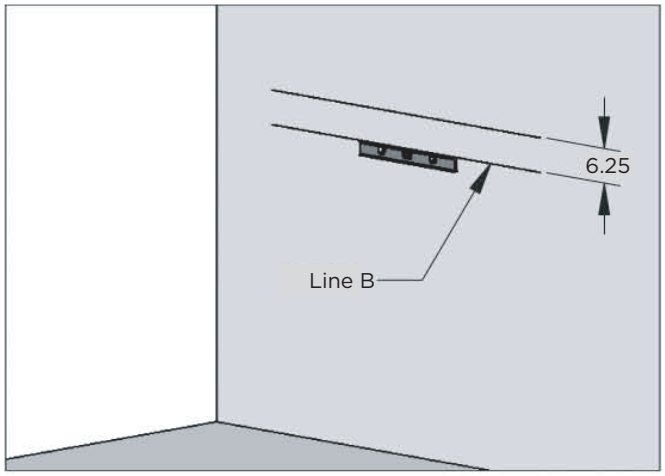

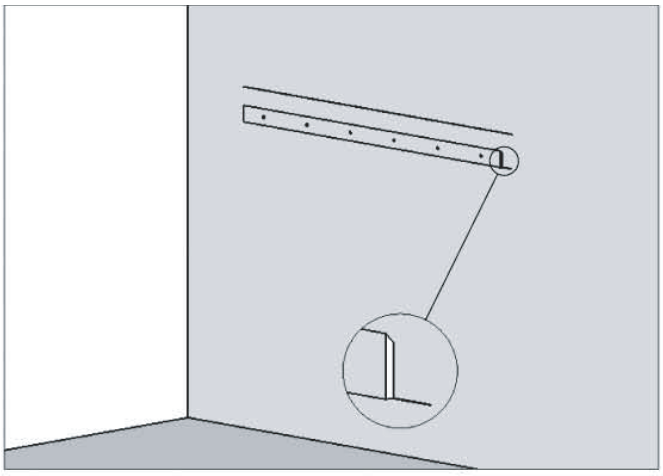

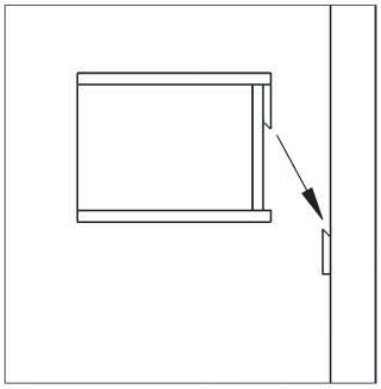

Media panel installation

1. Using a carpenter's level, draw a level horizontal line (Line A) where you want the top edge of the panel to be located. (**Figure A**)
2. Draw a second line (Line B) 4 ½″ below Line A. (**Figure A**)
3. Draw a third line (Line C, as noted in **Figure A**) below Line B. **Note**: 49MP and 55MP will require and addtional line (Line D) drawn as noted below
4. Position the wall brackets (**Detail A**) so the bottom edges are on lines B and C and are also positioned so they will line up with the brackets that are mounted onto the back of the panels, and mark the hole locations. **Note**: A small level is included and can be snapped onto the wall bracket, to aid with installation of the wall bracket.
5. Drill holes into the wall where marked and fasten the wall brackets. Hardware is provided, but may not be appropriate for your wall type. A professional contractor should determine the best attaching hardware for each specific application.
6. Remove the small level from the wall brackets once they are attached to the wall.
7. Hang the panel assembly onto the wall brackets, both parts (wall and media panel brackets) of the metal hanging brackets shall interlock together (**Detail B**).

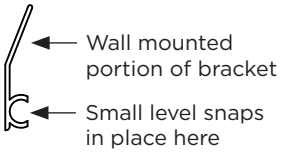

Detail A

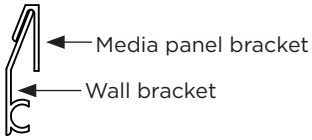

Detail B

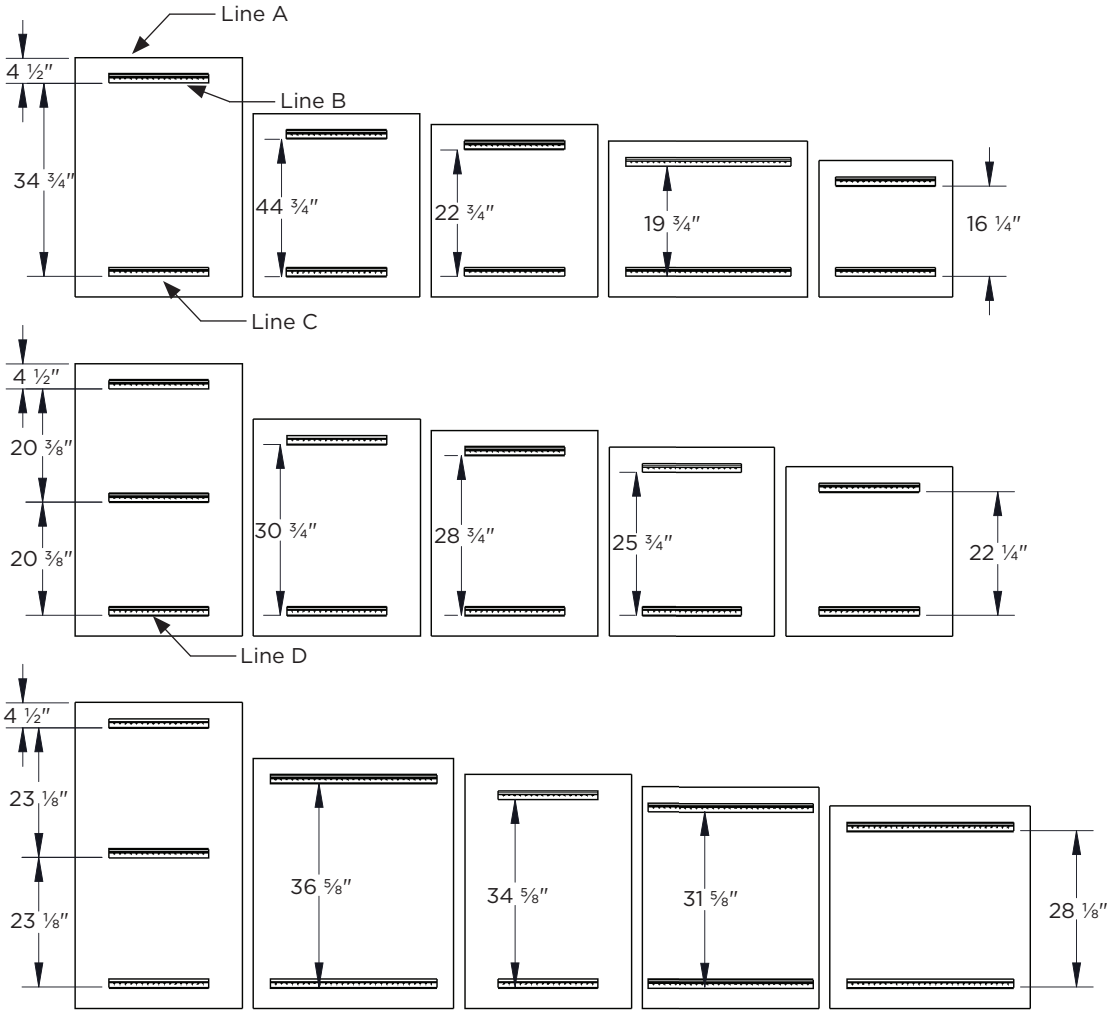

Figure A